STOVAX

Fire Your Imagination

Woodburning & Multi-fuel Stoves

From our hands to your home…

A Stovax stove is the sum of over 37 years of British design and engineering. Designed to not only provide a deep, warming heat for your home, each brings with it both character and individuality. Whether you opt for one of our traditional or contemporary designs, our obsessive attention to detail ensures our stoves are as refined on the outside as they are innovative on the inside.

Contents

Forged to Last 04
A Modern and Natural Answer 06
Designed for our Environment 08
Complete Peace of Mind 10
High Performance Heating 12

Traditional Stoves 14
Sheraton..... 16
Brunel..... 18
Huntingdon..... 24
Stockton..... 34
Riva Plus..... 66

Contemporary Stoves 70
Vogue..... 72
View 86
Vision..... 98

Boiler Stoves..... 114

Technical Information 122
Flue Pipe 138
Professional XQ™ Chimney Systems... 139

STOVAX
Fire Your Imagination

Forged to Last

Our woodburning and multi-fuel stoves are innovatively designed, solidly built and meticulously tested to ensure they continue to heat your home for many years to come.

Stockton 5 woodburning in Matt Black

Innovation in Design

With creativity and innovation at the heart of what we do, our expert design team continues to create unique, industry leading stoves that inspire and endure.

From the moment the first concept is sketched by hand, through to the mapping of airflow in the combustion chamber using cutting-edge software - stove design is a science we have been perfecting since 1981.

We continually invest in our research and development facilities to ensure our team is at the forefront of fire design, pioneering new concepts and technologies that make our woodburning and multi-fuel models some of the most sought after stoves available.

Quality Construction

Built with the finest quality materials, each stove is engineered here in the UK. Doors shut reassuringly to form an airtight seal, and air controls slide home both easily and responsively – year after year.

Cast iron and heavy gauge steel is used across our ranges to ensure each stove is built to the highest tolerances.

Possessing excellent thermal qualities, cast iron allows for the casting of intricate designs, making it perfect for traditional stoves. Heavy gauge steel is also an outstanding choice for stove construction, offering greater scope for design thanks to its versatile nature.

Rigorously tested

In our pioneering laboratories, each stove is put through a series of demanding tests to make sure it performs not only reliably - but exceptionally.

Here our development engineers continually refine our products to exceed the toughest UK and European standards, ensuring they are some of the cleanest burning and safest stoves available.

The Stovax Heating Group itself is also subject to stringent tests and we are proud to be an ISO9001 and ISO 14001accredited company; recognised for our continued commitment to technical innovation, high quality products and excellent customer and after-sales care.

A Modern and Natural Answer to Home Heating

Burning wood for heat has many environmental benefits, and when burnt responsibly on a high efficiency Stovax stove it offers a natural, clean and sustainable off-grid solution to home heating.

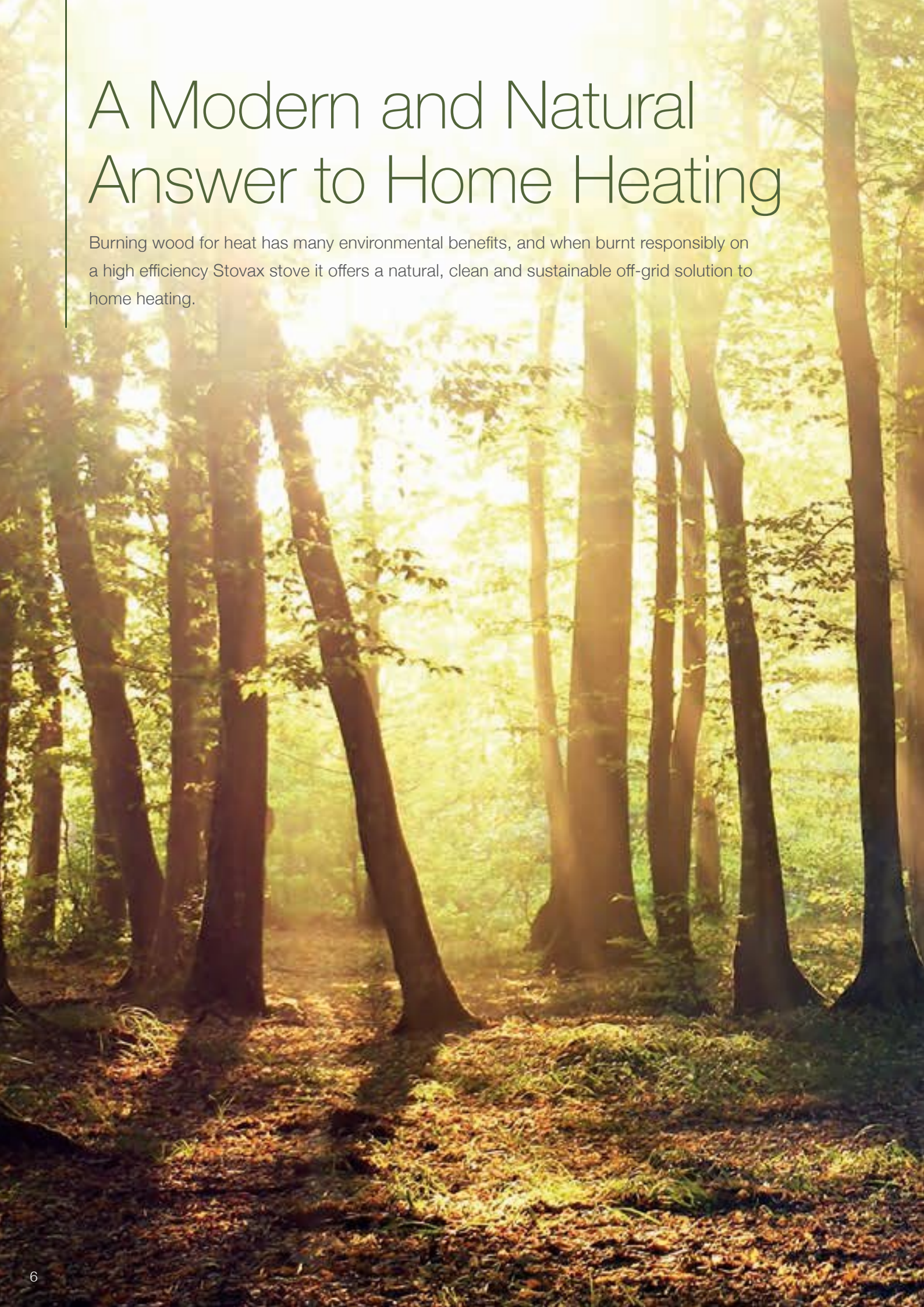

Wood or Multi-fuel?

All Stovax stoves are designed for high efficiency woodburning. Stoves that burn only wood have a burn chamber with a flat bed, as wood burns best on a bed of ashes.

Multi-fuel stoves burn logs but also give you the freedom to burn smokeless fuels with equally high efficiency. Their robust riddling grate can be opened or closed, allowing ash to be easily riddled into a built-in ash pan below. This allows air to flow under the fire to create the optimum conditions for burning these solid fuels.

Eco-friendly

Unlike fossil fuels, wood releases approximately the same amount of carbon into the atmosphere as that absorbed during its growth, making it a carbon neutral and environmentally friendly heat source.

Choosing one of our high efficiency clean burning stoves is a great step towards burning responsibly. However, to ensure your stove provides optimum heating performance, only seasoned logs with a low moisture content should be burnt. Logs should be seasoned for at least two years or more to achieve a moisture content below 20%, which can be easily checked with a moisture meter.

Seasoned wood will not only provide a higher heat output than that of freshly felled timber, it will also avoid a build-up of tar in your flue and ensure low smoke emissions with clean and crisp flame visuals.

STOVAX
Fire Your Imagination

To learn more about how to burn clean, visit **stovax.tv** and enter the video code **V0005**

Designed for our Environment

When you choose to heat your home with a Stovax clean burning stove, you are making an environmentally friendly choice. Our high efficiency Cleanburn technology is engineered to generate the maximum amount of heat from your fuel, with minimal emissions.

High Efficiency

All Stovax stoves have been designed to burn with high thermal efficiency, minimising the loss of heat energy during combustion. Every model in this brochure is subject to European energy labelling standards and almost all are rated as either A or A+ energy class appliances. Energy class and efficiency information is listed on each stove's product page for easy reference.

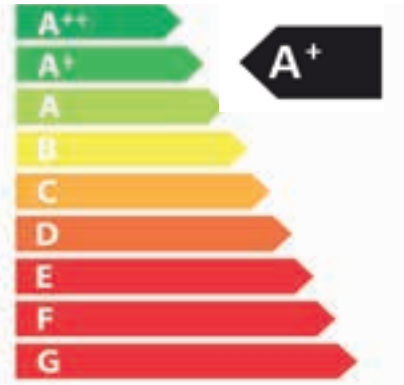

Urban Area Approved

Most town and city homes are located in Smoke Control Areas. To burn logs in these locations, the stove installed must be granted exemption from these restrictions by the government through DEFRA.

This exemption is given only to appliances which have been independently tested to demonstrate particularly clean burning combustion. Many stoves in this brochure are approved for use in Smoke Control Areas (when the appropriate smoke control kit is fitted and used in accordance with the product operating instructions) and this is shown on each product page. Your Stovax retailer can give you further help and advice.

SIA Ecodesign Ready

Whilst many of our stoves feature Cleanburn technology for high efficiency heating in smoke control areas, some models* burn so cleanly they meet, and in many cases even exceed, future Ecodesign emission and efficiency standards. Our Ecodesign products represent the next generation of clean burning stoves, reducing particulates by up to 84% in comparison with old appliances.

Ecodesign aims to improve air quality and will be introduced in 2022. From then on, stove manufacturers will only be able to sell Ecodesign Ready appliances. Working with the Stove Industry Alliance, Stovax helped to create and introduce the SIA Ecodesign Ready label initiative to the Stove and Fireplace industry. This helps you easily tell which products meet these forthcoming standards for ultra-low emissions.

We believe this is the future of solid fuel heating, which is why we are focusing our design and development efforts to create the cleanest burning stove and fire ranges possible.

Image left: Vision Medium Woodburning with Optional Glass Plinth and Glass Top Plate

*For further information on our Ecodesign Ready stoves please see page 136.

Complete Peace of Mind

Expert Retailer Network

We take great care to ensure that our stoves are designed, tested and manufactured to the highest possible quality and safety standards. It is just as important to us that they are sold and installed correctly, so that you enjoy years of pleasure from your purchase.

Accordingly, you will find our products are only available from experienced, independent retailers who will be happy to show you a selection of models locally in their showrooms, often burning.

These independent retailers will help you with your individual requirements, both technical (such as sizing the heat output to your room and advising on your flue type) and design, to ensure that you select the right stove for your home. They will also be able to advise on or help with the installation of your stove, as well as help provide any after-sales support and servicing your appliance may require in the future.

Whilst we encourage our retailers to promote fireplace products and their outlets via the internet, we do not believe suitable levels of customer care and satisfaction can be obtained from purchasing the product only online and we would strongly recommend that you consider this when undertaking your research and making a purchasing decision. Furthermore, please be aware that we do not offer technical support (beyond our statutory responsibilities) to products bought via nationwide online sales, where this support would normally be offered by one of our qualified, independent retailers.

You can find your nearest retailer by visiting: www.stovax.com/find-a-retailer

Five Year Extended Warranty

When you purchase a Stovax stove from our Expert Retailer Network your retailer will provide you with a Five Year Extended Warranty for your new solid fuel stove, provided it is registered with Stovax (see page 141). Stoves purchased outside of Stovax's Expert Retailer Network will carry a standard 1 Year Warranty. Full warranty terms & conditions are available to view at www.stovax.com

COUNTRY & TOWN
HOUSE

High Performance Heating

The Stovax woodburning and multi-fuel stove ranges include a wide range of different styles and sizes to suit your home. Each collection is designed and engineered here in Great Britain and features cutting-edge combustion systems with easy to use controls. The result is a stove that gives you stunning flames and high performance heating.

Top or rear flue pipe exit
Radiated heat warms room with some convector stove models also available.
Powerful Airwash system cleans glass for a superb view of the flames
AIRWASH System
Baffle system ensures minimal heat is lost up the chimney
Triple airflow system employs heated air jets to ignite hydrocarbons for stunning flame visuals and high efficiency clean burning (selected models)
CLEANBURN System
HIGH EFFICIENCY
High density thermal brick lining for high efficiency heating
Optional External Air Facility for draught reduction (selected models)
DEDICATED EXTERNAL AIR SUPPLY
Dedicated woodburning / Multi-fuel riddling system
Airtight door with large viewing window
High quality construction using the finest materials possible
Easy to use, responsive control system
Plinth, log store bases or stove bench styling options for elevated flames

Traditional Stoves

Our traditional stoves combine classic casting details with modern combustion technology. Timelessly styled, they add elegance and character to period and contemporary interiors alike.

Sheraton ..... 16 - 17

Brunel ..... 18 - 23

Huntingdon..... 24 - 33

Stockton ..... 34 - 65

Riva Plus ..... 66 - 69

Sheraton 5 Woodburning with optional longer legs in Stovax Claremont Limestone mantel

Sheraton 5

The Sheraton 5's classic but sophisticated aesthetics are designed to grace period or modern interiors alike. Visuals are prioritised by the vast stove window that grants superb views of the fire, and next generation, low emission combustion systems make these convector stoves perfect for town or country living.

Sheraton 5 Multi-fuel burning logs

Key Facts

5kW (2-7kW)	330mm	A
		up to 80%

- Multi-fuel model (with external riddling)
- Woodburning model
- Convector Stove
- Cast Iron & Heavy Gauge Steel
- Cleanburn and Airwash Systems
- Approved for Smoke Control areas*
- Ecodesign Ready (see page 136)
- Optional longer legs (see page 15)
- Optional dedicated external air kit
- Room vent not normally required**
- Flue outlet - 5" top or rear

** Subject to official listing*
***For more information on room vents, please see page 141*
For product dimensions please see page 122 onwards

Product Codes and Options

Finish	Matt Black
Woodburner	SH-5W-E
Multi-fuel	SH-5M-E
External Air Kit (page 135)	SH-5AIR both models
172mm Long Legs	SHLEG170 (see page 15)
Ash Caddy	4227

Convector Stoves

The Sheraton 5's convector design channels warm air between the firebox and the outer walls of the stove back into the room, for enhanced heating performance. This innovative feature also removes heat from the rear of the appliance, reducing the stove's distance to combustibles.

See additional images on pages 15 and 134

Sheraton 5 Woodburning, with Stovax Cavendish Bolection Limestone Mantel

Brunel 1A

Ideal for smaller rooms, the Brunel 1A is the smallest stove in the Stovax cast iron range and is designed to fit into a standard 22” high British fireplace. This model features airwash to help keep the glass window clear, full multi-fuel capability and an externally operated riddling grate.

Brunel 1A in Ivory Enamel burning logs.

Key Facts

4kW (2-6kW)	250mm	A up to 84%

- Multi-fuel model (with external riddling)
- Cast Iron Construction
- Airwash System
- Flue outlet - 5” top or rear
- Room vent not normally required*
- Longer leg options (175mm & 250mm)**
- Matching flue pipe in two colours

Product Codes and Options

Finish	Matt Black	Ivory Enamel
Multi-fuel	7008	7008IV
175mm Long Legs	BRLEG175	BRLEG175IV
250mm Long Legs	BRLEG250	BRLEG250IV
Ash Caddy	4227 all models	

For product dimensions please see page 122 onwards

**For more information on room vents, please see page 141*

*** The Brunel 1A is fitted with 95mm long legs as standard*

Brunel 1A in Matt Black burning logs.

Brunel 2CB in Matt Black burning logs.

Brunel 2CB

Offering extra heating efficiency and fuel economy with its advanced Cleanburn system, the Brunel 2CB incorporates all the state-of-the-art features you would expect from Stovax. For example, the stainless steel baffle warms up more quickly than cast iron so it starts working more rapidly for optimum heating performance.

Brunel 2CB in Matt Black burning logs.

Key Facts

6kW (3-8kW) | 330mm | A up to 79%

- Multi-fuel model (with external riddling)
- Cast Iron Construction
- Airwash System
- Cleanburn System with stainless steel heat exchanger
- Flue outlet - 5” top or rear
- Room vent not normally required*
- Longer leg options (175mm & 250mm)**
- Matching flue pipe in two colours

Product Codes and Options

Finish	Matt Black	Ivory Enamel
Multi-fuel	7051	7051IV
175mm Long Legs	BRLEG175	BRLEG175IV
250mm Long Legs	BRLEG250	BRLEG250IV
Ash Caddy	4227 all models	

For product dimensions please see page 122 onwards

**For more information on room vents, please see page 141*

*** The Brunel 2CB is fitted with 125mm long legs as standard*

Brunel 3CB in Matt Black with optional longer legs.
Shown with Stovax Cavendish Bolection mantel in Natural Limestone.

Brunel 3CB

The largest stove in the Brunel range, the 3CB has an extensive window through which you can enjoy the swirling flames. This 7kW stove incorporates an external riddling grate for solid fuel as well as Cleanburn and Airwash systems.

Brunel 3CB in Matt Black burning logs with optional longer legs

Key Facts

7kW (3.5-9kW)	400mm	A up to 83%

- Multi-fuel model (with external riddling)
- Cast Iron Construction
- Airwash System
- Cleanburn System with stainless steel heat exchanger
- Flue outlet - 6” top or rear
- Longer leg option - 250mm*

Product Codes and Options

Finish	Matt Black
Multi-fuel	7053
250mm Long Legs	BRLEG250
Ash Caddy	4228

For product dimensions please see page 122 onwards

**The Brunel 3CB is fitted with 175mm long legs as standard*

Huntingdon 25 in Matt Black with Clear Door burning logs.
Also shown, Stovax Claremont mantel in Limestone

Huntingdon 25

It may be the smallest stove in the Huntingdon range, but the Huntingdon 25 provides virtually all the features of larger models and is specially designed to suit everything from a country cottage to a modern townhouse. Ideal for burning logs, yet equally proficient with smokeless fuels or peat briquettes, the compact Huntingdon 25 is just the stove to bring you a picture of comfort this winter.

Huntingdon 25 in Matt Black with Tracery Door burning logs

Key Facts

4.9kW (3-7kW)	250mm	A up to 78%

- Multi-fuel model (with external riddling)
- Cast Iron Construction
- Airwash System
- Tracery or Clear Door models (Matt Black)
- Approved for Smoke Control Areas*
- Flue outlet - 5” top or rear
- Room vent not normally required**

Product Codes and Options

Finish	Matt Black
Multi-fuel - Tracery Door	7058
Multi-fuel - Clear Door	7057
Ash Caddy	4227
Smoke Control Kit	H25SCKIT

For product dimensions please see page 122 onwards

** When fitted with a Smoke Control Kit*

***For more information on room vents, please see page 141*

Huntingdon 28

With Gothic door mouldings complemented by reeded side panels, the Huntingdon stoves are elegant pieces of furniture in their own right and the Huntingdon 28 realises this timeless range's elegant styling in tall, portrait proportions. And with dual air control, you can precisely adjust the flame picture to the height you desire.

Huntingdon 28 in Matt Black with Clear Door burning logs

Key Facts

6kW (3-8kW)	300mm	A up to 82%

- Multi-fuel model (with external riddling)
- Cast Iron Construction
- Airwash and Cleanburn Systems
- Tracery or Clear Door models (Matt Black)
- Concealed handles and hinges
- Flue outlet - 5" top or rear
- Matching flue pipe in two colours

Product Codes and Options

Finish	Matt Black	Ivory Enamel
Multi-fuel - Tracery Door	7065	7065IV
Multi-fuel - Clear Door	7064	-
Ash Caddy	4227 all models	

For product dimensions please see page 122 onwards

Huntingdon 28 in Matt Black with Tracery Door burning logs

Huntingdon 30 in Matt Black with Tracery Door burning logs.

Huntingdon 30

The Huntingdon 30 combines refined, timeless styling with significant heating capacity. Dual air levers allow you to control the level of flames and heat output to suit your needs, providing full control over combustion. There is also an external riddling grate to aid in the efficient burning of smokeless fuels.

Huntingdon 30 in Ivory enamel with Tracery Door burning logs.
Shown with Stovax Claremont Limestone mantel.

Key Facts

6kW (3-8kW)	300mm	A up to 82%

- Multi-fuel model (with external riddling)
- Cast Iron Construction
- Airwash and Cleanburn Systems
- Tracery or Clear Door models (Matt Black)
- Concealed handles and hinges
- Flue outlet - 6” top or rear
- Matching flue pipe in two colours

Product Codes and Options

Finish	Matt Black	Ivory Enamel
Multi-fuel - Tracery Door	7055	7055IV
Multi-fuel - Clear Door	7054	-
Ash Caddy	4227 all models	

For product dimensions please see page 122 onwards

Huntingdon 35

The clean, graceful lines of the Huntingdon 35 make this classic design look attractive even when it is not alight. The woodburning version has a solid cast iron base and no ashpan, as wood burns more efficiently on a bed of ash. The multi-fuel version also incorporates external riddling and dual air controls for accurate regulation of the flames and combustion.

Huntingdon 35 Multi-fuel in Matt Black with Tracery Door burning logs.

Key Facts

7kW (3.5-9kW) | 350mm | A+ up to 82%

- Multi-fuel model (with external riddling)
- Woodburning model (Matt Black)
- Cast Iron Construction
- Airwash and Cleanburn Systems
- Tracery or Clear Door models (Matt Black)
- Concealed handles and hinges
- Flue outlet - 6” top or rear
- Shorter leg option - 160mm
- Matching flue pipe in two colours

Product Codes and Options

Finish	Matt Black	Ivory Enamel
Wood - Tracery Door	7063	-
Multi-fuel - Tracery Door	7061	7061IV
Multi-fuel - Clear Door	7060	-
Short Legs (set of 4)	7090S	7090IVS
Ash Caddy	4227 all models	

For product dimensions please see page 122 onwards

Huntingdon 35 woodburning in Matt Black with Tracery Door
Shown with Stovax Victorian Corbel Limestone mantel.

Huntingdon 40 Multi-fuel in Matt Black with Clear Door and Optional Short Legs burning logs.

Huntingdon 40

The largest and most powerful member of the Huntingdon family, the 40 makes a magnificent addition to any larger setting - effortlessly generating 9kW of heat at a remarkable 88% efficiency. The 40's refined looks are equally at home in both traditional inglenook and modern fireplace settings.

Huntingdon 40 Multi-fuel in Matt Black with Tracery Door burning logs.

Key Facts

9kW (4-11kW)	400mm	A up to 88%

- Multi-fuel model (with external riddling)
- Woodburning model (Matt Black)
- Cast Iron Construction
- Airwash and Cleanburn Systems
- Tracery or Clear Door models (Matt Black)
- Concealed handles and hinges
- Flue outlet - 6" top or rear
- Shorter leg option - 160mm

Product Codes and Options

Finish	Matt Black
Wood - Tracery Door	7069
Multi-fuel - Tracery Door	7075
Multi-fuel - Clear Door	7074
Short legs (set of 4)	7090S
Ash Caddy	4227 all models

For product dimensions please see page 122 onwards

Stockton 3

The mini stove of the Stockton range is specifically designed to fit neatly into a standard 22”(560mm) high x 16”(405mm) wide British fireplace opening with the chairbrick removed. It has full multi-fuel capability and its compact dimensions make this stove equally suitable for houseboats, summerhouses and garden workshops.

Stockton 3 in Matt Black burning logs

Key Facts

3.75kW (2-5kW)	200mm	A up to 86%

- Multi-fuel model (with external riddling)
- Cast Iron & Heavy Gauge Steel
- Cleanburn and Airwash Systems
- Approved for Smoke Control Areas*
- Flue outlet - 5” top or rear
- Room vent not normally required**
- Choice of four colour finishes

Product Codes and Options

Finish	Matt Black	Metallic Blue	Metallic Brown	Metallic Green
Multi-fuel	ST3MF1	ST3MF1BL	ST3MF1BR	ST3MF1GR
Sparkguard	7223 all models			
Ash Caddy	4227 all models			
Smoke Control Kit	SZKIT3 all models			
Heat Shield (page 135)	ST3HSK all models			

For product dimensions please see page 122 onwards

** When fitted with a Smoke Control Kit*

***For more information on room vents, please see page 141*

Stockton 3 in Matt Black burning logs

Stockton 4 multi-fuel in Matt Black burning logs.

Stockton 4

With its slim, vertical alignment the Stockton 4 is ideally suited to smaller rooms and will complement traditionally styled or contemporary interiors alike. As with the complete Stockton range, choose from a range of colours to further personalise your stove to your interior decor.

Stockton 4 woodburning in Matt Black burning logs with Stovax Malmo mantel and Highline log store.

Key Facts

4kW (2-6kW)	200mm	A up to 85%

- Multi-fuel models (with external riddling)
- Woodburning models
- Cast Iron & Heavy Gauge Steel
- Cleanburn and Airwash Systems
- Approved for Smoke Control Areas*
- Flue outlet - 5” top or rear
- Room vent not normally required**
- Choice of four colour finishes

Product Codes and Options

Finish	Matt Black	Metallic Blue	Metallic Brown	Metallic Green
Wood model	ST4W1	ST4W1BL	ST4W1BR	ST4W1GR
Multi-fuel model	ST4MF1	ST4MF1BL	ST4MF1BR	ST4MF1GR
Wood kit	WDKIT all models			
Sparkguard	7224 all models			
Ash Caddy	4227 all models			
Smoke Control Kit	SZKIT3 all models			
Heat Shield (page 135)	ST4HSK all models			

For product dimensions please see page 122 onwards

** When fitted with a Smoke Control Kit*

***For more information on room vents, please see page 141*

Stockton 5

A great all-rounder, the Stockton 5 is a mid-sized stove that will add personality to any room modern or traditional. The stove's additional width allows you to load logs up to 13" (330mm) in length. Both the woodburning and multi-fuel versions are available with a low canopy.

Stockton 5 multi-fuel in Matt Black with low canopy burning logs

Key Facts

4.9kW (2.5-7kW)	330mm	A up to 85%

- Multi-fuel models (with external riddling)
- Woodburning models
- Cast Iron & Heavy Gauge Steel
- Cleanburn and Airwash Systems
- Approved for Smoke Control Areas*
- Flue outlet - 5" top or rear
- Room vent not normally required**
- Flat Top and Low Canopy models
- Choice of four colour finishes

* When fitted with a Smoke Control Kit. (Models: ST5W1, ST5WLC1 and ST5MF1)

**For more information on room vents, see page 141

Product Codes and Options

Finish	Matt Black	Metallic Blue	Metallic Brown	Metallic Green
Woodburner - flat top	ST5W1	ST5W1BL	ST5W1BR	ST5W1GR
Woodburner - low canopy	ST5WLC1	ST5WLC1BL	ST5WLC1BR	ST5WLC1GR
Multi-fuel kit	MFKIT5 all woodburning models			
Multi-fuel - flat top	ST5MF1	ST5MF1BL	ST5MF1BR	ST5MF1GR
Multi-fuel - low canopy	ST5MFLC1	ST5MFLC1BL	ST5MFLC1BR	ST5MFLC1GR
Wood kit	WDKIT5 all multi-fuel models			
Ash Caddy	4227 all models			
Sparkguard	7225 all models			
Smoke Control Kit	SZKIT5 (woodburning) SZKIT5MF (flat top multi-fuel model)			
Heat Shield (page 135)	ST5HSK all models			

Further images shown on pages 4, 122 & 135

For product dimensions please see page 122 onwards

Stockton 5 woodburner. Shown here in Matt Black burning logs with Brompton mantel in White also available from Stovax.

Stockton 5 Midline

As an alternative to the standard Stockton 5, you can choose the Midline version with added presence and elevated flame visuals. The Midline provides all the benefits of the original model.

Stockton 5 Midline in Matt Black burning logs.

Key Facts

4.9kW (2.5-7kW)	330mm	A up to 85%

- Multi-fuel models (with external riddling)
- Cast Iron & Heavy Gauge Steel
- Cleanburn and Airwash Systems
- Approved for Smoke Control Areas*
- Flue outlet - 5” top or rear
- Room vent not normally required**
- Choice of four colour finishes

Product Codes and Options

Finish	Matt Black	Metallic Blue	Metallic Brown	Metallic Green
Multi-fuel model	ST5MIDMF1	ST5MIDMF1BL	ST5MIDMF1BR	ST5MIDMF1GR
Wood kit	WDKIT5 all multi-fuel models			
Ash Caddy	4227 all models			
Sparkguard	7225 all models			
Smoke Control Kit	SZKIT5MF all models			
Heat Shield (page 135)	ST5HSK all models			

For product dimensions please see page 122 onwards

** When fitted with a Smoke Control Kit.*

***For more information on room vents, please see page 141*

Stockton 5 Midline in Matt Black burning logs.

Stockton 5 Wide, single door in Matt Black burning logs. Shown with Stovax Claremont Limestone

Stockton 5 Wide

This wide format Stockton prioritises flame visuals with its landscape burn chamber and expansive viewing window. Thanks to its shallower depth, this versatile 5kW stove suits a broad range of room sizes and fireplaces, with the impressive flame picture of a much larger model.

Stockton 5 Wide, two door in Matt Black burning logs

Key Facts

5kW (2.5-7kW)	400mm	A up to 79%

- Woodburning models
- Cast Iron & Heavy Gauge Steel
- Single and two door models
- Optional multi-fuel kit
- Cleanburn and Airwash Systems
- Approved for Smoke Control Areas*
- Flue outlet - 5” top or rear
- Room vent not normally required**
- Choice of four colour finishes
- Shallow depth

Product Codes and Options

Finish	Matt Black	Metallic Blue	Metallic Brown	Metallic Green
Woodburner - single door	ST5WIDW1	ST5WIDW1BL	ST5WIDW1BR	ST5WIDW1GR
Woodburner - two door	ST5WIDWW2	ST5WIDW2BL	ST5WIDW2BR	ST5WIDW2GR
Multi-fuel kit	MFKIT5WID all woodburning models			
Sparkguard	7228 all models			
Ash Caddy	4228 all models			
Smoke Control Kit	SZKIT5WID all models			
Heat Shield (page 135)	ST5WIDHSK all models			

For product dimensions please see page 122 onwards

** When fitted with a Smoke Control Kit.*

***For more information on room vents, please see page 141*

Stockton Milner. Shown with Stovax Brompton mantel in Grey.

Stockton Milner

The Stockton Milner has been specifically designed to fit into a 16”- 18” wide and 20”- 22” high fireplace without the Milner brick needing to be removed. This means that it can be easily secured and sealed into an existing chimney without the requirement for any building work making it cheaper to install. More efficient than an open fire, the Stockton Milner gives you greater control of combustion, more heat for your money and therefore lower fuel costs.

Design Features

1. 5mm heavy duty steel body.
2. Easy fit.
3. Specifically designed for 16” or 18” Milner brick openings.
4. Cast Iron Side Panels.
5. Cast iron air-tight door with primary air control lever.
6. Airwash to maintain a cleaner glass window.
7. Heated air jets from Cleanburn ports burn hydrocarbons in smoke (internal).
8. External riddling lever.

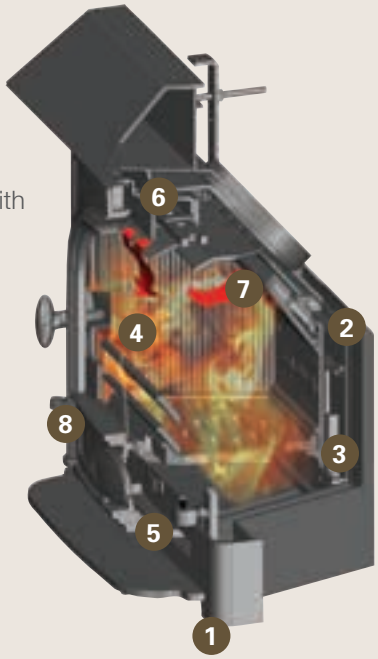

Key Facts

5kW (2-6kW)	250mm	A up to 76%

- Multi-fuel models (with external riddling)
- Woodburning models
- Cast Iron & Heavy Gauge Steel
- Cleanburn and Airwash Systems
- Approved for Smoke Control Areas*
- Flue outlet - 6” top
- Room vent not normally required**
- Choice of four colour finishes
- Fits into existing Milner fireback

Product Codes and Options

Finish	Matt Black	Metallic Blue	Metallic Brown	Metallic Green
Multi-fuel model	STMB	STMBBL	STMBBR	STMBGR
Sparkguard	7227 all models			
Ash Caddy	4227 all models			
Smoke Control Kit	STMBSCKIT all models			

For product dimensions please see page 122 onwards

** When fitted with a Smoke Control Kit*

***For more information on room vents, please see page 141*

Stockton 6

The Stockton 6 provides tall flame visuals thanks to its portrait burn chamber and looks equally good freestanding or in a fireplace. This versatile stove is offered as a woodburning model (easily adapted to multi-fuel use with the optional riddling grate kit) or as a dedicated multi-fuel version with external riddling. Alternatively, you can choose the multi-fuel Stockton 6 Highline version (see pages 48 - 49).

Stockton 6 multi-fuel in Matt Black burning logs.

Key Facts

6kW (3-7kW)	250mm	A up to 80%

- Multi-fuel models (with external riddling)
- Woodburning models
- Cast Iron & Heavy Gauge Steel
- Cleanburn and Airwash Systems
- Approved for Smoke Control Areas*
- Flue outlet - 5” top or rear
- Boiler option (see page 126)
- Choice of four colour finishes

** When fitted with a Smoke Control Kit.*

Product Codes and Options

Finish	Matt Black	Metallic Blue	Metallic Brown	Metallic Green
Wood model	ST6W1	ST6W1BL	ST6W1BR	ST6W1GR
Multi-fuel kit	MFKIT6 all wood models			
Multi-fuel model	ST6MF1	ST6MF1BL	ST6MF1BR	ST6MF1GR
Wood kit	WDKIT6 all multi-fuel models			
Clip-in boiler	7206 all models			
Sparkguard	7226 all models			
Ash caddy	4227 all models			
Smoke Control Kit	SZKIT6 all models			
Heat Shield (page 135)	ST6HSK all models			

For product dimensions please see page 122 onwards

Stockton 6 woodburning in Matt Black.
Pembroke surround also by Stovax.

The multi-fuel Stockton 6 Highline features external riddling, a handy warming shelf, wood store and extra large base plate. There is also a choice of colour matched tiles for the warming shelf.

Stockton 6 Highline

Perfect for kitchens and dining areas, this tall stove features a warming shelf that can be personalised with a choice of tiles as well as an elevated burn chamber for prominent flame visuals.

Warming Shelf Tiles

Every Highline stove is supplied with a three tile set for the warming shelf, in a choice of eight colours.

Key Facts

6kW (3-7kW) | 250mm | A up to 80%

- Multi-fuel models (with external riddling)
- Cast Iron & Heavy Gauge Steel
- Cleanburn and Airwash Systems
- Approved for Smoke Control Areas*
- Flue outlet - 5” top or rear
- Boiler option (see page 126)
- Choice of four colour finishes

Product Codes and Options

Finish	Matt Black	Metallic Blue	Metallic Brown	Metallic Green
Multi-fuel model	ST6HLMF1	ST6HLMF1BL	ST6HLMF1BR	ST6HLMF1GR
Wood kit	WDKIT6 all models			
Clip-in boiler	7206 all models			
Sparkguard	7226 all models			
Ash Caddy	4227 all models			
Smoke Control Kit	SZKIT6 all models			
Heat Shield (page 135)	ST6HSK all models			

** When fitted with a Smoke Control Kit.*

For product dimensions please see page 122 onwards

Stockton 7 Multi-fuel in Matt Black.

Stockton 7

The generous heat output and larger, but perfectly proportioned dimensions of the Stockton 7 make it an ideal choice for grander rooms. Available as a solid fuel or woodburning stove, the Stockton 7 can take logs up to 325mm in length meaning less work is required to prepare the fuel for your stove.

Stockton 7 multi-fuel in Metallic Brown. burning smokeless fuel

Key Facts

7kW (4-9kW)	325mm	A up to 80%

- Multi-fuel models (with external riddling)
- Woodburning models
- Cast Iron & Heavy Gauge Steel
- Cleanburn and Airwash Systems
- Approved for Smoke Control Areas*
- Flue outlet - 6” top or rear
- Clip In boiler option (see page 126)
- Choice of four colour finishes

Product Codes and Options

Finish	Matt Black	Metallic Blue	Metallic Brown	Metallic Green
Wood model	ST7W1	ST7W1BL	ST7W1BR	ST7W1GR
Multi-fuel kit	MFKIT7 all wood models			
Multi-fuel model	ST7MF1	ST7MF1BL	ST7MF1BR	ST7MF1GR
Wood kit	WDKIT7 all multi-fuel models			
Clip-in boiler	7207 all models			
Sparkguard	7227 all models			
Ash Caddy	4227 all models			
Smoke Control Kit	SZKIT5 all models			
Heat Shield (page 135)	ST7HSK all models			

** When fitted with a Smoke Control Kit.*

For product dimensions please see page 122 onwards

Stockton 7 Inset Convector

This 7kW inset convector stove offers a clean and integrated aesthetic, with the Stockton range's breath-taking flame visuals. This high efficiency stove features a convector for enhanced heating performance, and can also be selected as a boiler version (see pages 114 -119).

Stockton 7 Inset Convector with flat top, shown here in Matt Black burning logs.

Design Features

1. 5mm heavy duty steel body.
2. Easy fit flue connection through stove.
3. Vermiculite, thermal brick liner system.
4. Cast iron air-tight door with primary air control lever, clearly labelled and with a smooth trajectory for ease of use.
5. Airwash control lever and boost setting to maintain a cleaner glass window.
6. Heated air jets from Cleanburn ports burn hydrocarbons in smoke.
7. External riddling lever.
8. High output boiler version also available.
9. Optional low canopy.
10. Optional smoke control kit available (not illustrated)

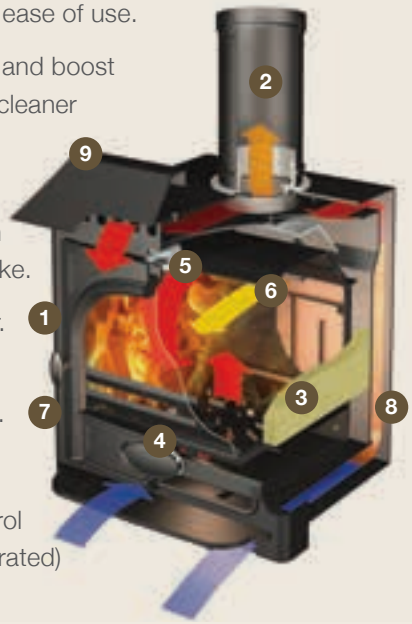

Key Facts

7kW (3-8kW)	325mm	A up to 87%

- Multi-fuel (with external riddling)
- Cast Iron & Heavy Gauge Steel
- Cleanburn and Airwash Systems
- Radiant and Convection heating
- Flat Top and Low Canopy models
- Approved for Smoke Control Areas*
- Flue outlet - 5" top
- Integral Boiler model (see page 114)
- Choice of four colour finishes

Product Codes and Options

Finish	Matt Black	Metallic Blue	Metallic Brown	Metallic Green
Flat top	ST7NMFFT1	ST7NMFFT1BL	ST7NMFFT1BR	ST7NMFFT1GR
Low Canopy	ST7NMFLC1	ST7NMFLC1BL	ST7NMFLC1BR	ST7NMFLC1GR
Sparkguard	7227 all models			
Ash caddy	4227 all models			
Smoke Control Kit	SZKITN all models			

For product dimensions please see page 122 onwards

** When fitted with a Smoke Control Kit.*

Stockton 7 Inset Convector with canopy top, shown here in Matt Black burning logs.

Stockton 8 woodburning, double door in Matt Black with high canopy

Stockton 8

This versatile stove is offered in a variety configurations to change the appearance and expand functionality. Choose from single or double door models as well as canopy options for a more traditional look. The Stockton 8 is also offered with an integral boiler (page 117) , or as a cook stove version (page 62).

This multi-fuel version of the flat top, single door Stockton 8 is fitted with the optional multi-fuel kit. The stove is shown here in Matt Black burning smokeless fuel.

Key Facts

8kW (4-11kW)

400mm

A

up to 81%

- Multi-fuel models (external riddling)
- Woodburning models
- Cast Iron & Heavy Gauge Steel
- Cleanburn and Airwash Systems
- Flat Top and Canopied models
- Single and Two Door models
- Flue outlet - 6” top or rear
- Integral Boiler model (see page 114)
- Cook Stove model (see page 62)
- Choice of four colour finishes

Product Codes and Options

Finish	Matt Black	Metallic Blue	Metallic Brown	Metallic Green
Wood - flat top, single door	ST8W1	ST8W1BL	ST8W1BR	ST8W1GR
Wood - high canopy, single door	ST8WHC1	ST8WHC1BL	ST8WHC1BR	ST8WHC1GR
Wood - flat top, two door*	ST8W2	ST8W2BL	ST8W2BR	ST8W2GR
Wood - low canopy, two door*	ST8WLC2	ST8WLC2BL	ST8WLC2BR	ST8WLC2GR
Wood - high canopy, two door*	ST8WHC2	ST8WHC2BL	ST8WHC2BR	ST8WHC2GR
Multi-fuel kit	MFKIT8 all models			
Multi-fuel - flat top, two door	ST8MF2	ST8MF2BL	ST8MF2BR	ST8MF2GR
Wood kit	WDKIT8 all multi-fuel models			
Clip-in boiler	7208 all models			
Sparkguard	7228 all models			
Ash caddy	4228 all models			

For product dimensions please see page 122 onwards

** Two door version - UK Registered Design Application No. 3001055*

Stockton 8 Inset Convector

Designed to the same specifications as the freestanding Stockton 8, this 8kW inset version fits neatly into a fireplace. This powerful multi-fuel stove features external riddling for burning smokeless fuels as well as Cleanburn and convection systems for greater heating efficiency.

Stockton 8 Inset Convector in Matt Black with flat top, shown here burning logs. Pembroke surround also by Stovax.

Design Features

1. 5mm heavy duty steel body.
2. Easy fit flue connection through stove.
3. Vermiculite, thermal brick liner system.
4. Cast iron air-tight door with primary air control lever, clearly labelled and with a smooth trajectory for ease of use.
5. Airwash control lever and boost setting to maintain a cleaner glass window.
6. Heated air jets from Cleanburn ports burn hydrocarbons in smoke.
7. External riddling lever.
8. Optional low canopy.

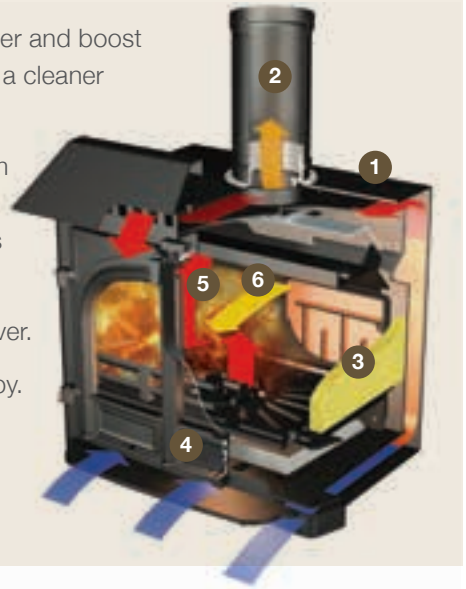

Key Facts

8kW (3-10kW)	400mm	A up to 84%

- Multi-fuel (with external riddling)
- Cast Iron & Heavy Gauge Steel
- Cleanburn and Airwash Systems
- Radiant and Convection heating
- Flat Top and Low Canopy models
- Flue outlet - 5” top
- Choice of four colour finishes

Product Codes and Options

Finish	Matt Black	Metallic Blue	Metallic Brown	Metallic Green
Flat top model	ST8NMFFT2	ST8NMFFT2BL	ST8NMFFT2BR	ST8NMFFT2GR
Low Canopy model	ST8NMFLC2	ST8NMFLC2BL	ST8NMFLC2BR	ST8NMFLC2GR
Sparkguard	7228 all models			
Ash caddy	4228 all models			

For product dimensions please see page 122 onwards

Stockton 8 Inset Convector in Matt Black with canopy top, shown here burning logs.

Stockton 11 & 14

The Stockton 11 and 14 look just as at home in a modern open plan house as they do in the large inglenook of a country cottage. The 14 is a dedciated woodburner whilst the 11 is offered with different door, canopy and fuel options meaning this versatile stove can be configured to suit your home and lifestyle.

Stockton 14 with flat top in Matt Black.

Key Facts

11: 11kW (7-14kW) 14: 14kW (8-17kW)	11: 500mm 14: 600mm	A 11: 81% 14: 73%

- Multi-fuel models (Stockton 11)
- Woodburning models
- Cast Iron & Heavy Gauge Steel
- Cleanburn and Airwash Systems
- Flat Top and Canopied models
- Single and Two Door models (Stockton 11)
- Flue outlet - 6” top or rear
- Integral Boiler models (page 127)
- Clip-in Boiler option (page 133)
- Cook Stove model (Stockton 11 - page 62)
- Choice of four colour finishes

For product dimensions please see page 122 onwards

Product Codes and Options

Stockton 11	Matt Black	Metallic Blue	Metallic Brown	Metallic Green
Wood - flat top, single door	ST11W1	ST11W1BL	ST11W1BR	ST11W1GR
Wood - low canopy, single door	ST11WLC1	ST11WLC1BL	ST11WLC1BR	ST11WLC1GR
Wood - high canopy, single door	ST11WHC1	ST11WHC1BL	ST11WHC1BR	ST11WHC1GR
Wood - flat top, two door	ST11W2	ST11W2BL	ST11W2BR	ST11W2GR
Wood - high canopy, two door	ST11WHC2	ST11WHC2BL	ST11WHC2BR	ST11WHC2GR
Multi-fuel kit	MFKIT11 all standard models			
Clip-in boiler	7211-2 all standard models			
Ash Caddy	4228 all models			
Sparkguard	7221- multi-fuel models. 7221W - woodburning models			
Stockton 14				
Wood - flat top, 2 door	ST14W2	ST14W2BL	ST14W2BR	ST14W2GR
Wood - high canopy, 2 door	ST14WHC2	ST14WHC2BL	ST14WHC2BR	ST14WHC2GR
Ash Caddy	4228 all models			

Stockton 11 woodburning with high canopy and single door in Matt Black.

Stockton 11 Double high canopy in Matt Black burning logs.

Stockton Double Sided

Stockton Double Sided stoves provide a superb focal point, with doors and viewing windows on both the front and back. Available in both 8 and 11 sizes, they are designed to provide high efficiency heating and stunning flame visuals to two adjacent rooms.

Stockton 8 Double flat top in Matt Black burning logs.

Key Facts

8 DS: 9kW
11 DS: 11kW

8 DS: 400mm
11 DS: 500mm

A 8 DS: up to 75%
C 11 DS: up to 75%

- Woodburning
- Cast Iron and Heavy Gauge Steel
- Optional Multi-fuel kit allows burning of smokeless fuel
- Flat Top and High Canopy models
- Airwash Systems
- Flue outlet - 6” top or rear
- Choice of four colour finishes

For product dimensions please see page 122 onwards

Product Codes and Options

Finish	Matt Black	Metallic Blue	Metallic Brown	Metallic Green
8 Double Wood - Flat Top	ST8SDW2	ST8SDW2BL	ST8SDW2BR	ST8SDW2GR
8 Double Wood - High Canopy	ST8SDWHC2	ST8SDWHC2BL	ST8SDWHC2BR	ST8SDWHC2GR
Multi-fuel kit	MFKIT8SD all Stockton 8 Double Sided models			
Sparkguard	7221 (multi-fuel) 7221W (woodburning)			
11 Double Wood - Flat Top	ST11SDW2	ST11SDW2BL	ST11SDW2BR	ST11SDW2GR
11 Double Wood - High Canopy	ST11SDWHC2	ST11SDWHC2BL	ST11SDWHC2BR	ST11SDWH2CGR
Multi-fuel kit	MFKIT11SD all Stockton 11 Double Sided models			
Sparkguard	7221 (multi-fuel) 7221W (woodburning)			

Stockton Cook Stoves

A great addition to the kitchen or dining room, Stockton cook stoves are specially designed with a durable, polished cooktop that provides optimum heat transfer for easy cooking. More than capable of heating multiple pans whilst boiling a kettle on the spacious hotplate, these versatile cooktop models let you get the most out of your stove whether cooking, dining or entertaining.

Stockton 11 Cook Stove, single door with optional warming shelves

Stockton Cook Stoves

Offered in both 8 and 11 sizes, Stockton Cook stoves can be fitted with optional steel warming shelves for additional space. Freshly cooked food or boiled pans can be taken off the heat and kept warm, helping you to regulate cooking temperatures and giving you space to cook other dishes if required.

Stockton 11 Cook Stove in Matt Black, double door with optional warming shelves

Key Facts

8: 8kW (4-11kW) 11: 11kW (7-14kW)	8: 400mm 11: 500mm	A up to 81%

- Woodburning models
- Optional Multi-fuel kit allows burning of smokeless fuel
- Cast Iron and Heavy Gauge Steel
- Airwash & Cleanburn Systems
- Polished Cooktop
- Optional Warming Shelves
- Single or Two Door versions
- Flue outlet - 6” top or rear
- Choice of four colour finishes

Product Codes and Options

Finish	Matt Black	Metallic Blue	Metallic Brown	Metallic Green
8 Single Door Wood - Flat Top	ST8CSW1	ST8CSW1BL	ST8CSW1BR	ST8CSW1GR
8 Double Door Wood - Flat Top	ST8CSW2	ST8CSW2BL	ST8CSW2BR	ST8CSW2GR
Multi-fuel kit	MFKIT8 all Stockton 8 Cook Stoves			
Warming Shelves (Pair)	ST8SHELF	ST8SHELFBL	ST8SHELFBR	ST8SHELFGR
11 Single Door Wood - Flat Top	ST11CSW1	ST11CSW1BL	ST11CSW1BR	ST11CSW1GR
11 Double Door Wood - Flat Top	ST11CSW2	ST11CSW2BL	ST11CSW2BR	ST11CSW2GR
Multi-fuel kit	MFKIT11 all Stockton 11 Cook Stoves			
Warming Shelves (Pair)	ST11SHELF	ST11SHELFBL	ST11SHELFBR	ST11SHELFGR

For product dimensions please see page 122 onwards

Stockton 8 Cook Stove in Matt Black, Single door with optional warming shelves. Shown with Stovax Small Curved Log Holder

Riva Plus Small woodburning with low canopy

Riva Plus Small & Midi

Compact yet powerful, these stoves not only has the performance and fuel efficiency to heat your room or living space effectively, but also the versatility to match your decorative style. If you have a little more space available then the Riva Plus Midi will provide you with the extra heating capacity to make slightly larger rooms cosy throughout the winter.

Riva Plus Midi Multi-fuel burning logs.
Shown with removable window crosses

Key Facts

S: 5kW (2-7kW)
M: 6.5kW (2.5-8kW)

S: 250mm
M: 300mm

A

S: up to 79%
M: up to 72%

- Multi-fuel model (with external riddling)
- Woodburning model (Small only)
- Cast Iron and Heavy Gauge Steel
- Approved for Smoke Control Areas*
- Cleanburn and Airwash Systems
- Boost setting for lighting & re-fuelling
- Flat top model with canopy options
- Removable window crosses (Midi only)
- Optional fan-assisted convection system
- Optional external air kit (Midi only)
- Room vent not normally required**
- Flue outlet - 5” top or rear

Product Codes and Options

	Small	Midi
Finish	Matt Black	Matt Black
Woodburner - flat top	RVP-SMW	-
Multi-fuel - flat top	RVP-SMM	RVP-MDM
External Air Kit	-	RVP0002 both models
Fan-assisted Convection Kit	RVP0006 both models	RVP0006 both models
Multi-fuel Smoke Control Kit*	RVP-SMMSCKIT	RVP-MEMSCKIT
Low Canopy	RVP-SMLC both models	RVP-MDLC both models
High Canopy	RVP-SMHC both models	-

CLEANBURN System
AIRWASH System
EXTERNAL Air Supply
SMOKE CONTROL AREA EXEMPT

For product dimensions please see page 122 onwards

** Multi-fuel model only, when fitted with a Smoke Control Kit*

***For more information on room vents, please see page 141*

Riva Plus Medium & Large

These versatile models are ideal for medium to larger sized rooms and is available in both wood and multi-fuel versions. There are also several options to suit your individual needs. Whether you are seeking significant heating potential, a magnificent focal point or have a large inglenook, these generously-proportioned stoves will meet your needs.

Riva Plus Medium Woodburning shown with removable window crosses

Key Facts

M: 8kW (3-10kW)
L: 11kW (4-13kW)

M: 350mm
L: 400mm

A

M: up to 71%
L: up to 78%

- Multi-fuel model (with external riddling)
- Woodburning model
- Cast Iron and Heavy Gauge Steel
- Cleanburn and Airwash Systems
- Boost setting for lighting & re-fuelling
- Flat top model with low canopy option (Large only)
- Removable window crosses
- Optional fan-assisted convection system
- Optional external air kit (Large only)
- Flue outlet - 5" (Medium) & 6" (Large) top or rear

Product Codes and Options

	Medium	Large
Finish	Matt Black	Matt Black
Woodburner - flat top	RVP-MEW	RVP-LAW
Multi-fuel - flat top	RVP-MEM	RVP-LAM
External Air Kit	-	RVP0004 both models
Fan-assisted Convection Kit	RVP0009 both models	RVP0009 both models
Low Canopy	-	RVP-LALC both models

CLEANBURN System

AIRWASH System

EXTERNAL Air Supply

For product dimensions please see page 122 onwards

Riva Plus Large Multi-fuel burning logs.

Contemporary Stoves

Our contemporary stove collection presents captivating designs with elegant, minimalist styling. Adding a signature piece to any setting, these designer stoves feature expansive viewing windows for an uninterrupted view of the flames.

Vogue ..... 72 - 85

View ..... 86 - 97

Vision ..... 98 - 111

Vogue Midi woodburning with optional Plinth base

Vogue Small

An excellent choice for smaller fireplaces or living spaces, the Vogue Small provides an ample 5kW of heat despite being the most compact model in the range. This state-of-the-art, ultra-clean burning stove can be selected in multi-fuel or woodburning versions.

Vogue Small woodburning with optional Plinth base

Key Facts

5kW (2-7kW)

280mm

Wood A+ | Multi-fuel A

up to 81%

- Multi-fuel model (with external riddling)
- Woodburning model
- Cast Iron & Heavy Gauge Steel
- Cleanburn and Airwash Systems
- Approved for Smoke Control areas
- Ecodesign Ready (see page 136)
- Integral Cast Iron Top Plate
- Optional Plinth & Midline wood store bases
- Optional dedicated external air kit
- Room vent not normally required*
- Stove bench compatible (see page 140)
- Flue outlet - 5” top or rear

Product Codes and Options

Finish	Matt Black
Woodburner	VG-SMWU-E
Multi-fuel	VG-SMMU-E
Plinth Base	VG-SM-BP both models
Midline Base	VG-SM-BML-E both models
External Air Kit (page 135)	SMAIR-E both models
Heat Shield (page 135)	VG-SMHSK-E both models
Wood Kit	WDKITSM
Ash Caddy	4227
Stove Benches	See page 140

For product dimensions please see page 122 onwards

** Multi-fuel models are subject to official listing*
***For more information on room vents, please see page 141*

Vogue Small woodburning with optional Midline base

Vogue Small T woodburning with optional Midline base.
Also shown: Contemporary tool set and bracket from Stovax.

Vogue Small T

This taller version of the Vogue Small offers the same compact footprint whilst providing a portrait flame view. Plinth or Midline log store bases, as well as our choice of stove benches offer further styling possibilities.

Vogue Small T multi-fuel burning logs with optional Plinth

Key Facts

WB: 4.8kW
MF: 5kW
(2-7kW)

280mm

A

up to 80%

- Multi-fuel model (with external riddling)
- Woodburning model
- Cast Iron & Heavy Gauge Steel
- Cleanburn and Airwash Systems
- Approved for Smoke Control areas*
- Ecodesign Ready (see page 136)
- Integral Cast Iron Top Plate
- Optional Plinth & Midline wood store bases
- Optional dedicated external air kit
- Room vent not normally required**
- Stove bench compatible (see page 140)
- Flue outlet - 5” top or rear

Product Codes and Options

Finish	Matt Black
Woodburner	VG-SMTWU-E
Multi-fuel	VG-SMTMU-E
Plinth Base	VG-SM-BP both models
Midline Base	VG-SM-BML-E both models
External Air Kit (page 135)	SMAIR-E both models
Heat Shield (page 135)	VG-SMTHSK-E both models
Wood Kit	WDKITSM
Ash Caddy	4227
Stove Benches	See page 140

For product dimensions please see page 122 onwards

** Multi-fuel models are subject to official listing*
***For more information on room vents, please see page 141*

Vogue Midi

Offering a superb view of the flames, the versatile styling of the Vogue Midi fits perfectly into contemporary and traditional interiors alike. The range's advanced Ecodesign ready Cleanburn combustion systems allow the Midi to reach an impressive 81% thermal efficiency whilst generating an ample 5kW of heat.

Vogue Midi multi-fuel burning logs with optional Midline wood store base

Key Facts

5kW (2.5-7kW)	330mm	A up to 78%

- Multi-fuel model (with external riddling)
- Woodburning model
- Cast Iron & Heavy Gauge Steel
- Cleanburn and Airwash Systems
- Approved for Smoke Control areas*
- Ecodesign Ready (see page 136)
- Integral Cast Iron Top Plate
- Optional Plinth & Midline wood store bases
- Optional dedicated external air kit
- Room vent not normally required**
- Stove bench compatible (see page 140)
- Flue outlet - 5" top or rear

Product Codes and Options

Finish	Matt Black
Woodburner	VG-MIDWU-E
Multi-fuel	VG-MIDMU-E
Plinth Base	VG-MID-BP both models
Midline Base	VG-MID-BML-E both models
External Air Kit (page 135)	MIDAIR-E both models
Heat Shield (page 135)	VG-MIDHSK-E both models
Wood Kit	WDKITMID
Ash Caddy	4228
Stove Benches	See page 140

Further images shown on pages 70, 129, 135 & 140

For product dimensions please see page 122 onwards

** Multi-fuel models are subject to official listing*

***For more information on room vents, please see page 141*

Vogue Midi woodburning with optional Plinth base.
Shown with Stovax Claremont mantel in Limestone

Vogue Midi T woodburning with optional Midline wood store base

Vogue Midi T

With its tall burn chamber and viewing window, the Midi T provides impressive flames for eye-catching visuals. The range's next generation combustion system ensure low smoke emissions for high efficiency, ultra-clean burning.

Vogue Midi T multi-fuel burning logs with optional Plinth base

Key Facts

5kW (2.5-7kW)	330mm	A up to 80%

- Multi-fuel model (with external riddling)
- Woodburning model
- Cast Iron & Heavy Gauge Steel
- Cleanburn and Airwash Systems
- Approved for Smoke Control areas*
- Ecodesign Ready (see page 136)
- Integral Cast Iron Top Plate
- Optional Plinth & Midline wood store bases
- Optional dedicated external air kit
- Room vent not normally required**
- Optional Wall Mounting Bracket (see page 80)
- Stove bench compatible (see page 140)
- Flue outlet - 5" top or rear

Product Codes and Options

Finish	Matt Black
Woodburner	VG-MIDTWU-E
Multi-fuel	VG-MIDTMU-E
Plinth Base	VG-MID-BP both models
Midline Base	VG-MID-BML-E both models
Wall Mounting Bracket (page 80)	MIDWM
External Air Kit (page 135)	MIDAIR-E both models
Heat Shield (page 135)	VG-MIDTHSK-E both models
Wood Kit	WDKITMID
Ash Caddy	4228
Stove Benches	See page 140

For product dimensions please see page 122 onwards

** Multi-fuel models are subject to official listing*

***For more information on room vents, please see page 141*

Vogue Midi T Wall Hung

This wall-mounted version of the Vogue Midi T adds a designer installation in any setting, and can be top or rear flued to suit. This minimalist stove features all the innovative design aspects of the Vogue range, including powerful Airwash and ultra-clean burning combustion systems.

Vogue Midi T multi-fuel with optional wall mounting bracket

Key Facts

5kW (2.5-7kW)	330mm	A up to 80%

- Multi-fuel model (with external riddling)
- Woodburning model
- Cast Iron & Heavy Gauge Steel
- Cleanburn and Airwash Systems
- Approved for Smoke Control areas*
- Ecodesign Ready (see page 136)
- Integral Cast Iron Top Plate
- Optional Plinth & Midline wood store bases
- Optional dedicated external air kit
- Room vent not normally required**
- Flue outlet - 5” top or rear

Product Codes and Options

Finish	Matt Black
Woodburner	VG-MIDWU-E
Multi-fuel	VG-MIDMU-E
Plinth Base	VG-MID-BP both models
Midline Base	VG-MID-BML-E both models
Wall Mounting Bracket	MIDWM
External Air Kit (page 135)	MIDAIR-E both models
Wood Kit	WDKITMID
Ash Caddy	4228

For product dimensions please see page 122 onwards

** Multi-fuel models are subject to official listing*

***For more information on room vents, please see page 141*

Vogue Midi T woodburning with optional Plinth base and wall mounting bracket

Vogue Medium

With an expansive stove window that features the range's self-cleaning Airwash technology, the Medium's superb flame visuals provide a captivating focal point on a cold winter's eve. This large format stove is offered in woodburning and multi-fuel versions and can be installed with Plinth, Midline log store or stove bench mounting options.

Vogue Medium woodburning with optional Midline wood store base

Key Facts

WB: 7kW
MF: 7.5kW
(5-11kW)

430mm

A
up to 76%

- Multi-fuel model (with external riddling)
- Woodburning model
- Cast Iron & Heavy Gauge Steel
- Cleanburn and Airwash Systems
- Approved for Smoke Control areas*
- Ecodesign Ready (see page 136)
- Integral Cast Iron Top Plate
- Optional Plinth & Midline wood store bases
- Optional dedicated external air kit
- Stove bench compatible (see page 140)
- Flue outlet - 6" top or rear

Product Codes and Options

Finish	Matt Black
Woodburner	VG-MEDWU-E
Multi-fuel	VG-MEDMU-E
Plinth Base	VG-MED-BP both models
Midline Base	VG-MED-BML both models
External Air Kit (page 135)	MEDAIR-E both models
Heat Shield (page 135)	VG-MEDHSK-E both models
Wood Kit	WDKITMED
Ash Caddy	4230
Stove Benches	See page 140

For product dimensions please see page 122 onwards

** Multi-fuel models are subject to official listing*

***When fitted with a dedicated external air kit. For more information on room vents, see page 141.*

Vogue Medium Slimline multi-fuel burning logs. Shown with Stovax Bevelled Contemporary Toolset & Stand

Vogue Medium Slimline

This wide-format stove offers the stunning flame visuals of the more powerful Medium model (page 82) whilst maintaining a 5kW heat output, thanks to its slim depth. This stylishly contemporary stove is available in either woodburning or multi-fuel versions to suit your lifestyle.

Vogue Medium Slimline woodburning

Key Facts

5kW (2.5-7kW)	400mm	A up to 79%

- Multi-fuel model (with external riddling)
- Woodburning model
- Cast Iron & Heavy Gauge Steel
- Cleanburn and Airwash Systems
- Approved for Smoke Control areas*
- Ecodesign Ready† (see page 136)
- Integral Cast Iron Top Plate
- Optional Plinth & Midline wood store bases
- Optional dedicated external air kit
- Room vent not normally required**
- Stove bench compatible (see page 140)
- Flue outlet - 5” top or rear

Product Codes and Options

Finish	Matt Black
Woodburner	VG-MEDSLWU
Multi-fuel	VG-MEDSLMU-E
Plinth Base	VG-MEDSL-BP
Midline Base	VG-MEDSL-BML
External Air Kit (page 135)	MEDSLAIR-E both models
Heat Shield Kit (page 135)	VG-MEDHSK-E
Wood Kit	WDKITMEDSL
Ash Caddy	4228

For product dimensions please see page 122 onwards

** Subject to official listing*

***For more information on room vents, please see page 141*

† Multi-fuel version only

View 3

This compact stove offers you multi-fuel capacity and high efficiency heating. Although designed to be installed into a standard 22” (560mm) high x 16” (405mm) wide opening with the chair brick removed, the View 3 is just as attractive freestanding on a hearth or stove bench.

View 3 Multi-fuel burning logs with optional glass top plate

Key Facts

3.75kW (2-5kW)	200mm	A up to 86%

- Multi-fuel model (with external riddling)
- Cast Iron & Heavy Gauge Steel
- Cleanburn and Airwash Systems
- Approved for Smoke Control areas
- Optional Ceramic Glass Top Plate
- Integral Ceramic Glass Plinth
- Optional Stainless Steel Control Handles
- Room vent not normally required*
- Stove bench compatible (see page 140)
- Flue outlet - 5” top or rear

Product Codes and Options

Finish	Metallic Black
Multi-fuel	VW-3MF1
Glass Top Plate (top flue exit)	VW-3GB
Glass Top Plate (rear flue exit)	VW-3GBR
Stainless Steel Handle Set	VW-HANDLE-SS
Heat Shield (page 135)	VW3-HSK
Ash Caddy	4227
Stove Benches	See page 140

For product dimensions please see page 122 onwards

**For more information on room vents, please see page 141*

Community Design Application Number 001202600

View 3 multi-fuel burning logs with optional glass top plate.

View 5 Woodburner with optional glass top plate on 100 high stove bench shown with gloss black flue pipe.

View 5

Prioritising flame visuals with its large window, the View 5 brings clean lines and modern styling to your interior. This stylish stove is available as a standard or Midline log store version and both can be selected as woodburning or multi-fuel.

View 5 Midline Multi-fuel burning logs with optional glass top plate. Also shown with Stovax Highline Log Store.

Key Facts

4.9kW (2.5-7kW)	330mm	A up to 85%

- Multi-fuel model (with external riddling)
- Woodburning model
- Cast Iron & Heavy Gauge Steel
- Cleanburn and Airwash Systems
- Approved for Smoke Control areas
- Optional Ceramic Glass Top Plate
- Integral Ceramic Glass Plinth
- Optional Stainless Steel Control Handles
- Midline wood store models
- Room vent not normally required*
- Stove bench compatible (see page 140)
- Flue outlet - 5” top or rear

Product Codes and Options

Model	View 5	View 5 Midline
Finish	Metallic Black	
Woodburner	VW-5W1	VW-5MIDW1
Multi-fuel (with external riddling)	VW-5MF1	VW-5MIDMF1
Glass Top Plate (top flue exit)	VW-5GB all models	
Glass Top Plate (rear flue exit)	VW-5GBR all models	
Stainless Steel Handle Set	VW-HANDLE-SS all models	
Heat Shield (page 135)	VW-5HSK all models	
Ash Caddy	4228 all models	
Stove Benches	See page 140	

For product dimensions please see page 122 onwards

**For more information on room vents, please see page 141*

Community Design Application Number 001202600

View 5 Wide Woodburning with optional glass top plate and stainless steel handle set and gloss black flue pipe

View 5 Wide

Designed to provide the flame visuals of a larger stove without the increased heat output, the 5kW View 5 Wide features a large front aspect with a shallow profile. All View stoves employ powerful Airwash jets to keep the window clear and Cleanburn combustion systems for high efficiency heating.

View 5 Wide Woodburning with optional glass top plate and stainless steel handle set

Key Facts

4.9kW (2.5-7kW)	400mm	A up to 81%

- Multi-fuel model (with external riddling)
- Woodburning model
- Cast Iron & Heavy Gauge Steel
- Cleanburn and Airwash Systems
- Approved for Smoke Control areas*
- Optional Ceramic Glass Top Plate
- Integral Ceramic Glass Plinth
- Optional Stainless Steel Control Handles
- Room vent not normally required**
- Stove bench compatible (see page 140)
- Flue outlet - 5” top or rear

Product Codes and Options

Model	View 5 Wide
Finish	Metallic Black
Woodburner	VW-5WIDW1
Multi-fuel (with external riddling)	VW-5WIDMF1
Glass Top Plate (top flue exit)	VW-5WIDGB
Glass Top Plate (rear flue exit)	VW-5WIDGBR
Stainless Steel Handle Set	VW-HANDLE-SS all models
Heat Shield (page 135)	ST5WIDHSK
Ash Caddy	4230 all models
Stove Benches	See page 140

For product dimensions please see page 122 onwards

**Subject to official listing*

***For more information on room vents, please see page 141*

Community Design Application Number 001202600

View 5T

The View 5T's portrait design instantly adds an impressive centrepiece to any interior with its geometric styling and vertical lines. Presented in both standard and Midline versions, this tall stove fits perfectly in freestanding installations or taller fireplaces.

View 5T Woodburning

Key Facts

4.9kW (2.5-7kW)	330mm	A up to 85%

- Multi-fuel model (with external riddling)
- Woodburning model
- Cast Iron & Heavy Gauge Steel
- Cleanburn and Airwash Systems
- Approved for Smoke Control areas
- Optional Ceramic Glass Top Plate
- Integral Ceramic Glass Plinth
- Optional Stainless Steel Control Handles
- Midline wood store models
- Room vent not normally required*
- Stove bench compatible (see page 140)
- Flue outlet - 5" top or rear

Product Codes and Options

Model	View 5T	View 5T Midline
Finish	Metallic Black	
Woodburner	VW-5TW1	VW-5TMIDW1
Multi-fuel (with external riddling)	VW-5TMF1	VW-5TMIDMF1
Glass Top Plate (top flue exit)	VW-5GB all models	
Glass Top Plate (rear flue exit)	VW-5GBR all models	
Stainless Steel Handle Set	VW-HANDLE-SS all models	
Heat Shield (page 135)	VW5THSK all models	
Ash Caddy	4228 all models	
Stove Benches	See page 132	

Further image shown on page 131

For product dimensions please see page 122 onwards

**For more information on room vents, please see page 141*

Community Design Application Number 001202600

View 5T Midline Woodburning shown with optional glass top and stainless steel handle set

View 7 Inset Convector

The contemporary View stoves range includes an inset convector fireplace, which offers many of the heating advantages of a freestanding stove. Incorporating Stovax's exceptional Cleanburn and convection systems, the multi-fuel View 7 Inset Convector can also be selected as an integral boiler version, producing up to 30,000 BTU's of hot water (see page 114).

Design Features

1. 5mm heavy duty steel body.
2. Easy fit flue connection through stove.
3. High density, thermal brick liner system.
4. Cast iron air-tight door with integrated primary air control slider.
5. Integrated Airwash control slider to maintain a cleaner glass window.
6. Heated air jets from Cleanburn ports burn hydrocarbons in smoke.
7. High output boiler version also available.
8. Optional top glass plate
9. Riddling system

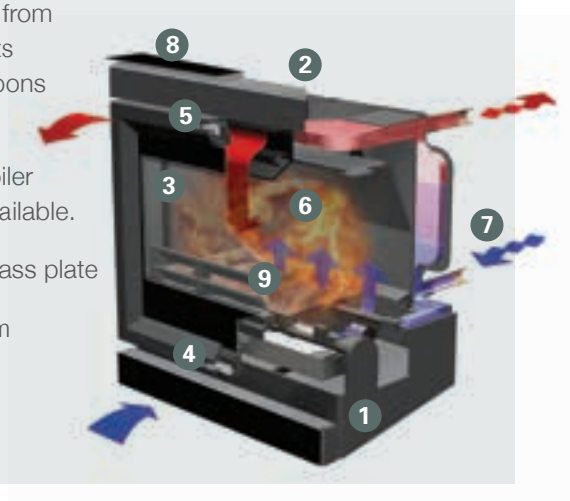

Key Facts

7kW (3-8kW)	325mm	A up to 87%

- Multi-fuel model (with external riddling)
- Cast Iron & Heavy Gauge Steel
- Cleanburn and Airwash Systems
- Approved for Smoke Control areas
- Optional Ceramic Glass Top Plate
- Integral Ceramic Glass Plinth
- Optional Stainless Steel Control Handles
- Radiant Heat & Convection Systems
- Integral Boiler model available (page 114)
- Flue outlet - 5" top

Product Codes and Options

Finish	Metallic Black
Multi-fuel	VW-7NMF1
Glass Top Plate (top flue exit)	VW-7NGB
Stainless Steel Handle Set	VW-HANDLE-SS

For product dimensions please see page 122 onwards

Community Design Application Number 001202600

View 7 Inset Convector burning logs with optional glass top. Also shown: Stovax Claremont Limestone mantel.

View 8

The powerful View 8 is designed to provide high efficiency heating for contemporary homes as well as creating an outstanding focal point for your living space. Choose from either the woodburning only model or the multi-fuel version as well as Midline logstore and boiler versions.

View 8 multi-fuel with optional glass top plate burning logs

Key Facts

8kW (4-11kW)	400mm	A up to 81%

- Multi-fuel model (with external riddling)
- Woodburning model
- Cast Iron & Heavy Gauge Steel
- Cleanburn and Airwash Systems
- Optional Ceramic Glass Top Plate
- Integral Ceramic Glass Plinth
- Optional Stainless Steel Control Handles
- Midline wood store models
- Stove bench compatible (see page 140)
- Integral boiler version (see page 114)
- Flue outlet - 6" top or rear

Product Codes and Options

Model	View 8	View 8 Midline
Finish	Metallic Black	
Woodburner	VW-8W1	VW-8MIDW1
Multi-fuel (with external riddling)	VW-8MF1	VW-8MIDMF1
Glass Top Plate (top flue exit)	VW-8GB all models	
Glass Top Plate (rear flue exit)	VW-8GBR all models	
Stainless Steel Handle Set	VW-HANDLE-SS all models	
Ash Caddy	4230 all models	
Stove Benches	See page 140	

For product dimensions please see page 122 onwards

Community Design Application Number 001202600

View 8 Midline woodburning with optional glass top plate and stainless steel handle set.

Vision Small

The vision range is defined by its striking black glass surfaces and stainless steel detailing. The Small's compact proportions belie it's generous 5kW heat output – the perfect way to add big impact to your smaller fireplace openings and bring some designer flare to your living space.

Vision Small woodburning with optional Glass Top, Plinth and Gloss Black Flue Pipe

Key Facts

5kW (2-7kW)	280mm	Wood A+ / Multi-fuel A
		up to 81%

- Multi-fuel model (with external riddling)
- Woodburning model
- Heavy Gauge Steel & Ceramic Glass
- Cleanburn and Airwash Systems
- Approved for Smoke Control areas*
- Ecodesign Ready (see page 136)
- Optional Ceramic Glass Top Plate
- Optional Glass Fronted Plinth
- Optional Dedicated External Air Kit
- Room vent not normally required**
- Stove bench compatible (see page 140)
- Flue outlet - 5" top or rear

Product Codes and Options

Finish	Metallic Black
Woodburner	RVN-SMW-E
Multi-fuel	RVN-SMM-E
Plinth Base	RVN-SMPG-E both models
Ceramic Glass Top Plate (top flue exit)	RVN-SMGB both models
Ceramic Glass Top Plate (rear flue exit)	RVN-SMGBR both models
External Air Kit (page 135)	SMAIR-E both models
Heat Shield (page 135)	RVN-SMHSK-E both models
Wood Kit	WDKITSM
5" Decorative Flue Cover	RVAC150B both models
Ash Caddy	4227
Stove Benches	See page 140

For product dimensions please see page 122 onwards

** Multi-fuel models are subject to official listing*
*** For more information on room vents, please see page 141*

Vision Small Woodburning with optional Glass Top

Vision Small T

A taller version of the Vision Small, the T model offers identical heating performance but in a portrait format for an even more elegant flame picture. The optional Vogue Midline log store base, plinth or stove benches allow for an even more prominant focal point.

Vision Small T woodburning with optional Glass Top and Glass Plinth with Gloss Black Flue Pipe on 120 High bench

Key Facts

WB: 4.8kW
MF: 5kW
(2-7kW)

280mm

A

up to 80%

- Multi-fuel model (with external riddling)
- Woodburning model
- Heavy Gauge Steel & Ceramic Glass
- Cleanburn and Airwash Systems
- Approved for Smoke Control areas*
- Ecodesign Ready (see page 136)
- Optional Ceramic Glass Top Plate
- Optional Glass Fronted Plinth
- Optional Dedicated External Air Kit
- Room vent not normally required**
- Stove bench compatible (see page 140)
- Flue outlet - 5” top or rear

Product Codes and Options

Finish	Metallic Black
Woodburner	RVN-SMTW-E
Multi-fuel	RVN-SMTM-E
Plinth Base	RVN-SMPG-E both models
Ceramic Glass Top Plate (top flue exit)	RVN-SMGB both models
Ceramic Glass Top Plate (rear flue exit)	RVN-SMGBR both models
External Air Kit (page 135)	SMAIR-E both models
Heat Shield (page 135)	RVN-SMTHSK-E both models
Wood Kit	WDKITSM
5” Decorative Flue Cover	RVAC150B both models
Ash Caddy	4227
Stove Benches	See page 140

For product dimensions please see page 122 onwards
** Multi-fuel models are subject to official listing*
***For more information on room vents, please see page 141*

Vision Small T multi-fuel burning logs with optional Glass Top & Gloss Black Flue Pipe

Vision Midi Woodburning with Optional Glass Plinth

Vision Midi

Offering the perfect balance of form and function, this mid-sized stove lends itself to the widest spectrum of installations and features the range's signature clean, geometric form and reflective detailing. There are many optional extras to enhance your Vision, including a dedicated external air kit that allows air to be drawn from the outside and therefore minimising the potential for drafts in your room.

Vision Midi Woodburning with optional Glass Top Plate and Gloss Black Flue Pipe

Key Facts

5kW (2.5-7kW)	330mm	A up to 78%

- Multi-fuel model (with external riddling)
- Woodburning model
- Heavy Gauge Steel & Ceramic Glass
- Cleanburn and Airwash Systems
- Approved for Smoke Control areas*
- Ecodesign Ready (see page 136)
- Optional Ceramic Glass Top Plate
- Optional Glass Fronted Plinth
- Optional Dedicated External Air Kit
- Room vent not normally required**
- Stove bench compatible (see page 140)
- Flue outlet - 5" top or rear

Product Codes and Options

Finish	Metallic Black
Woodburner	RVN-MIDW-E
Multi-fuel	RVN-MIDM-E
Plinth Base	RVN-MIDPG-E both models
Ceramic Glass Top Plate (top flue exit)	RVN-MIDGB both models
Ceramic Glass Top Plate (rear flue exit)	RVN-MIDGBR both models
External Air Kit (page 135)	MIDAIR-E both models
Heat Shield (page 135)	RVN-MIDHSK-E both models
Wood Kit	WDKITMID
5" Decorative Flue Cover	RVAC150B both models
Ash Caddy	4228
Stove Benches	See page 140

For product dimensions please see page 122 onwards

** Multi-fuel models are subject to official listing*
***For more information on room vents, please see page 141*

Vision Midi T Woodburning with Optional Glass Top Plate and Glass Plinth with Gloss Black Flue pipe

Vision Midi T

The Vision Midi T is designed to similar specifications as the standard Midi version, yet offers a taller burn chamber for a greatly enhanced flame viewing area. Tailor your Vision with a choice of Stovax's stylish stove benches, log store base or matching glass plinth.

Vision Midi T mutli-fuel burning logs with optional glass top plate and gloss black flue pipe

Key Facts

5kW (2-7kW)	330mm	A up to 80%

- Multi-fuel model (with external riddling)
- Woodburning model
- Heavy Gauge Steel & Ceramic Glass
- Cleanburn and Airwash Systems
- Approved for Smoke Control areas*
- Ecodesign Ready (see page 136)
- Optional Ceramic Glass Top Plate
- Optional Glass Fronted Plinth
- Optional Dedicated External Air Kit
- Room vent not normally required**
- Stove bench compatible (see page 140)
- Optional Wall Mounting Bracket (page 106)
- Flue outlet - 5" top or rear

Product Codes and Options

Finish	Metallic Black
Woodburner	RVN-MIDTW-E
Multi-fuel	RVN-MIDTM-E
Plinth Base	RVN-MIDPG-E both models
Ceramic Glass Top Plate (top flue exit)	RVN-MIDGB both models
Ceramic Glass Top Plate (rear flue exit)	RVN-MIDGBR both models
External Air Kit (page 135)	MIDAIR-E both models
Heat Shield (page 135)	RVN-MIDTHSK-E both models
Wall Mounting Bracket (page 106)	MIDWM
Wood Kit	WDKITMID
5" Decorative Flue Cover	RVAC150B both models
Ash Caddy	4228
Stove Benches	See page 140

For product dimensions please see page 122 onwards
** Multi-fuel models are subject to official listing*
***For more information on room vents, please see page 141*

Vision Midi T Wall Hung

Perfect for settings such as kitchens or dining areas, the Vision Midi T Wall Mounted raises the flames for optimum visibility. This ultra-modern stove perfectly suits this designer installation option, adding a chic centrepiece in any setting.

Vision Midi T woodburning with optional Wall Mounting Bracket and Glass Plinth

Key Facts

5kW (2-7kW)	330mm	A up to 80%

- Multi-fuel model (with external riddling)
- Woodburning model
- Heavy Gauge Steel & Ceramic Glass
- Cleanburn and Airwash Systems
- Approved for Smoke Control areas*
- Ecodesign Ready (see page 136)
- Optional Ceramic Glass Top Plate
- Optional Glass Fronted Plinth
- Optional Dedicated External Air Kit
- Room vent not normally required**
- Flue outlet - 5” top or rear

For product dimensions please see page 122 onwards
** Multi-fuel models are subject to official listing*
***For more information on room vents, please see page 141*

Product Codes and Options

Finish	Metallic Black
Woodburner	RVN-MIDTW-E
Multi-fuel	RVN-MIDTM-E
Wall Mounting Bracket	MIDWM
Plinth Base	RVN-MIDPG-E both models
Ceramic Glass Top Plate (top flue exit)	RVN-MIDGB both models
Ceramic Glass Top Plate (rear flue exit)	RVN-MIDGBR both models
External Air Kit (page 135)	MIDAIR-E both models
Wood Kit	WDKITMID
5” Decorative Flue Cover	RVAC150B both models
Ash Caddy	4228

Vision Midi T woodburning with optional Wall Mounting Bracket and Gloss Black Flue Pipe

Vision Medium

The Medium is a large format stove with a stunning, expansive flame picture and high efficiency heat output of up to 7.5kW. This impressive stove achieves outstanding style and powerful heating potential in equal measure.

Vision Medium woodburning with optional Glass Plinth and Gloss Black Flue Pipe

Key Facts

WB: 7kW
MF: 7.5kW
(5-11kW)

430mm

A
up to 76%

- Multi-fuel model (with external riddling)
- Woodburning model
- Heavy Gauge Steel & Ceramic Glass
- Cleanburn and Airwash Systems
- Approved for Smoke Control areas*
- Ecodesign Ready (see page 136)
- Optional Ceramic Glass Top Plate
- Optional Glass Fronted Plinth
- Optional Dedicated External Air Kit
- Stove bench compatible (see page 140)
- Flue outlet - 6" top or rear

Product Codes and Options

Finish	Metallic Black
Woodburner	RVN-MEDW-E
Multi-fuel	RVN-MEDM-E
Plinth Base	RVN-MEDPG-E both models
Ceramic Glass Top Plate (top flue exit)	RVN-MEDGB both models
Ceramic Glass Top Plate (rear flue exit)	RVN-MEDGBR both models
External Air Kit (page 135)	MEDAIR-E both models
Heat Shield (page 135)	RVN-MEDHSK-E both models
Wood Kit	WDKITMED
6" Decorative Flue Cover	RVAC220B both models
Ash Caddy	4230
Stove Benches	See page 140

Further image shown on page 132

** Multi-fuel models are subject to official listing*
***For more information on room vents, please see page 141*

Vision Medium woodburning

Vision Medium Slimline

This wide-format stove offers the stunning flame visuals of the more powerful Medium model (page 108) whilst maintaining a 5kW heat output, thanks to its slim depth. This stylishly contemporary stove is available in either woodburning or multi-fuel versions to suit your lifestyle.

Vision Medium Slimline woodburning with optional Glass Plinth and Gloss Black Flue Pipe

Key Facts

5kW (2.5-7kW)	400mm	A up to 79%

- Multi-fuel model (with external riddling)
- Woodburning model
- Heavy Gauge Steel & Ceramic Glass
- Cleanburn and Airwash Systems
- Approved for Smoke Control areas*
- Ecodesign Ready† (see page 136)
- Optional Ceramic Glass Top Plate
- Optional Glass Fronted Plinth
- Optional dedicated external air kit
- Room vent not normally required**
- Stove bench compatible (see page 140)
- Flue outlet - 5” top or rear

Product Codes and Options

Finish	Metallic Black
Woodburner	RVN-MEDSLW
Multi-fuel	RVN-MEDSLM-E
Plinth Base	RVN-MEDSLPG-E
Ceramic Glass Top Plate (top flue)	RVN-MEDSLGB both models
Ceramic Glass Top Plate (rear flue)	RVN-MEDSLGBR both models
External Air Kit (page 135)	MEDSLAIR-E both models
Heat Shield Kit (page 135)	RVN-MEDHSK-E
5” Decorative Flue Cover	RVAC150B both models
Ash Caddy	4228

For product dimensions please see page 122 onwards

** Subject to official listing*

***For more information on room vents, please see page 141*

† Multi-fuel version only

Vision Medium Slimline woodburning with
Gloss Black Flue Pipe on Stovax 100 High Bench

Studio 2 Freestanding on 140 Low Bench with Gloss Black Flue Pipe

Fires at the Forefront of Contemporary Design

Alongside the stoves in this brochure, Stovax also offer signature cassette, stove and freestanding fire ranges. Providing the same high efficiency and clean burning combustion, these contemporary models redefine modern fire aesthetics.

Studio 3 Profil

These ranges represent the pinnacle of fire and stove design, with pure, minimalist styles that create an arresting centrepiece in any setting.

From the sublime Studio range, with its expansive landscape flame visuals, to the versatile Riva and ultra-clean burning Elise collections, these models can be selected in various sizes and heat outputs to suit your home.

To find out more about these designer fire ranges, ask your local retailer or visit www.stovax.com.

Riva 50 with 4 sided Profil frame

Freestanding Elise 540T wall mounted

High Output Boiler Stoves

Our high output boiler stoves have been specifically designed to supply your home with hot water and central heating.

Whether you are looking for a complete, home-heating solution, or just want to supplement your existing central heating system, our Stockton and View boiler stoves grant you independence from energy providers, when you want it.

Stockton Boiler Stoves .....116 - 119
View Boiler Stoves .....120 - 121

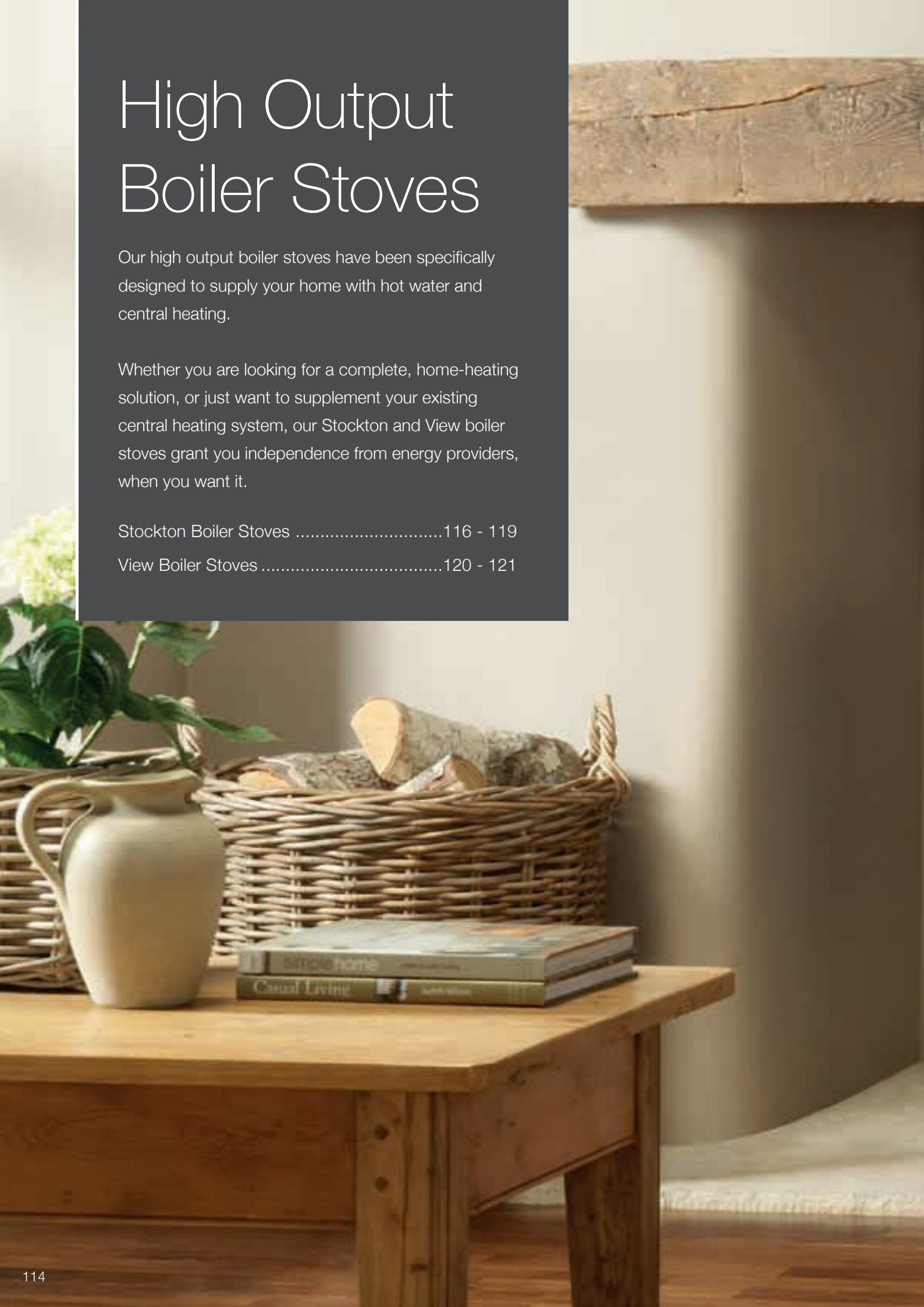

Stockton 14HB Multi-fuel Boiler Stove burning logs

High Output Boiler Stoves

Stockton 7HB Inset Boiler Stove.

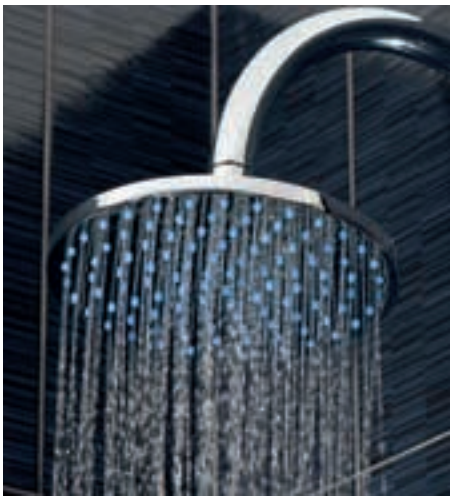

Complete Off-grid Living

Our High Output Boiler stoves are capable of feeding an average 8,000 BTU hot water cylinder and depending on the model, up to 19 radiators - providing exceptional heating performance throughout your home.

The exact number of radiators your boiler stove will heat depends upon the sizes of the rooms they are sited in, as well as the sizes of the radiators themselves. A typical 400mm high x 1000mm wide, single panel radiator requires 2500BTU/hr but to ensure a boiler stove can meet your requirements, speak to a qualified solid fuel heating engineer.

Flexible Heating

Stovax woodburning and multi-fuel boiler stoves give you all the clean burning performance and flame visuals of our dedicated stove ranges.

Each multi-fuel model incorporates a riddling grate for smokeless fuels, which provides greater calorific values. For lower CO_2 emissions, wood and smokeless fuels can be burnt together.

Should you wish to burn wood only, multi-fuel boiler stoves will still achieve good performance but as logs burn best with slightly different combustion chamber characteristics, we recommend purchasing the optional log tray for optimum results. Alternatively, Stockton 11HB and 14HB models are available as dedicated woodburning models.

Link Up with existing systems

Stovax boiler stoves can link up with a central heating system to provide an alternative or additional heat source, reducing reliance on gas or oil systems to decrease overall heating costs.

Our boiler stoves can link with conventional oil or gas central heating, gas or oil sealed heating systems, combi boilers, underfloor heating and even solar panels to provide flexible, cost-effective solutions.

For more information, see our Link Up guide which shows typical arrangements and covers some frequently asked questions. You may find it useful to download this from www.stovax.com/linkup before discussing your requirements with a qualified heating engineer.

Stockton 8HB Boiler Stove. When burning wood, the use of the optional tray is recommended.

Design Features

1. Heavy duty steel body
2. Excellent heat output to water when burning solid fuels or wood
3. 4 x 1" BSP boiler tappings for flexible, efficient connection to your hot water circuits
4. Extensive water jacket on 4 sides for transmission of heat to water
5. Highly developed boiler flue baffle system ensures maximum heating efficiency
6. Top or rear flue exit (7HBi top exit only)
7. Specially designed reciprocating grate ensures effective removal of ashes*
8. Large ash collection tray
9. Discreet external riddling socket with removable tool
10. Unique heated air jets from cleanburn ports burn hydrocarbons in smoke. (UK Patent GB2495920)
11. Levelling system to ensure stability on uneven surfaces
12. Primary air controls to manually adjust the running temperatures
13. Airwash system with boost setting to help keep glass clear
14. Optional glass top plate (View models only)
15. Thermostatic control to maintain desired running temperatures
16. Optional woodburning tray for multi-fuel models (not illustrated)

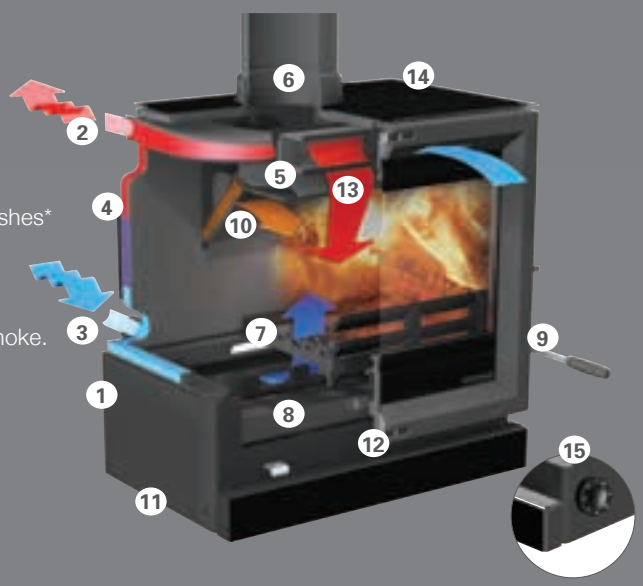

Stockton 14HB Woodburning Boiler Stove.

Stockton Boiler Stoves

Key Facts	7HBi	8HB	11HB	14HB
Multi-fuel with external riddling	✓	✓	✓	✓
Dedicated woodburning version	✗	✗	✓	✓
Airwash & Unique Cleanburn Systems (UK Patent GB2495920)	✓	✓	✓	✓
Nominal heat output to room	4.0kW	4.9kW	7.0kW	7.0kW
Nominal heat output to boiler	7.4kW	8.2kW	11.0kW	15.0kW
Energy efficiency raiting	A	A	A	A
Maximum system rating	8.8kW (30,000BTU)	10kW (34,000BTU)	13kW (45,000BTU)	18kW (62,000BTU)
Radiator capabilities - example No. of 2500BTU radiators + 8000BTU cylinder	8 radiators	9 radiators	15 radiators	19 radiators
Maximum log length	325mm	400mm	500mm	600mm
Flue outlet	5” top	6” top or rear	6” top or rear	6” top or rear
Thermostatic Control	✓	✓	✓	✓

Stockton 11HB Multi-fuel Boiler Stove shown burning logs
When burning wood, the optional tray is recommended.

Colour	Matt Black	Metallic Blue	Metallic Brown	Metallic Green
7HB - Inset multi-fuel with low canopy	7125HB	7125HBBL	7125HBBR	7125HBGR
8HB - Multi-fuel with flat top	ST8HBMF2	ST8HBMF2BL	ST8HBMF2BR	ST8HBMF2GR
11HB - Multi-fuel with flat top	ST11HBMF2	ST11HBMF2BL	ST11HBMF2BR	ST11HBMF2GR
11HB - Woodburning with flat top	ST11HBW2	ST11HBW2BL	ST11HBW2BR	ST11HBW2GR
14HB - Multi-fuel with flat top	ST14HBMF2	ST14HBMF2BL	ST14HBMF2BR	ST14HBMF2GR
14HB - Woodburning with flat top	ST14HBW2	ST14HBW2BL	ST14HBW2BR	ST14HBW2GR
Thermostat - 7HB Inset	STATIN suitable for all colour options			
Thermostat - 8HB, 11HB & 14HB	STATST suitable for all colour options			
Woodburning tray 7HB Inset - Multi-fuel	7125WT suitable for all colour options			
Woodburning tray 8HB - Multi-fuel	8HBWT suitable for all colour options			
Woodburning tray 11HB - Multi-fuel	11HBWT suitable for all colour options			
Woodburning tray 14HB - Multi-fuel	14HBWT suitable for all colour options			

View Boiler Stoves

View 7HBi Boiler stove.
When burning wood the use of the optional wood tray is recommended.

Key Facts	7HBi	8HB
Multi-fuel with external riddling	✓	✓
Airwash	✓	✓
Unique Cleanburn System (UK Patent GB2495920)	✓	✓
Nominal heat output to room	4.0kW	4.9kW
Nominal heat output to boiler	7.4kW	8.2kW
Energy efficiency raiting	A	A
Maximum system rating	8.8kW (30,000BTU)	10.0kW (34,000BTU)
Radiator capabilities example: Number of 2500BTU radiators + 8000BTU cylinder	8 Radiators	9 Radiators
Maximum log length	325mm	400mm
Optional log tray	✓	✓
Flue outlet	5” Top	6” Top & Rear
Optional Ceramic glass top	✓	✓
Integral ceramic glass plinth	✓	✓
Thermostatic Control	✓	✓
Stove bench compatible	✗	✓

Product Codes and Options	
View 7HB Inset	VW-7NHB
View 8HB	VW-8HBMF1
Thermostat - 7HBi	STATIN
Thermostat - 8HB	STATST
Woodburning tray - 7HBi	7125WT
Woodburning tray - 8HB	8HBWT
Stainless Steel Handle Set	VW-HANDLE-SS
Stove benches	See page 140

View 8HB Boiler stove. When burning wood the use of the optional wood tray is recommended.

Stockton 5 multi-fuel in Matt Black burning logs. Shown with Stovax Pembroke Mantel

Technical Information

The information on the following pages is to assist you in your choice of a suitable Stovax stove.
A HETAS approved installer should undertake a site survey prior to purchase and must install any Stovax stove. Your Stovax retailer will be able to advise on this.

This is not intended to be all the information required to install your stove. This can be obtained from your local Stovax retailer. You can also download the full installation instructions from www.stovax.com.

Dimensions - Traditional Stoves

Sheraton 5 ..... pages 16-17

Weight: Wood: 91.5kg
Multi-fuel: 95kg

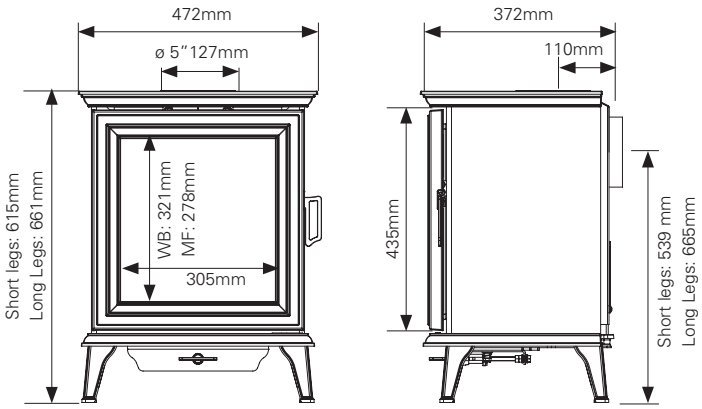

Huntingdon 25 ..... pages 24-25

Weight: 98kg

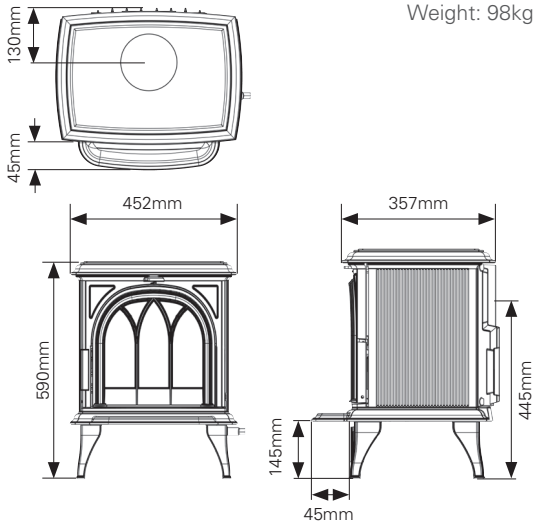

Brunel 1A & 2CB..... pages 18-21

Weight:
1A: 62kg 2CB: 90kg

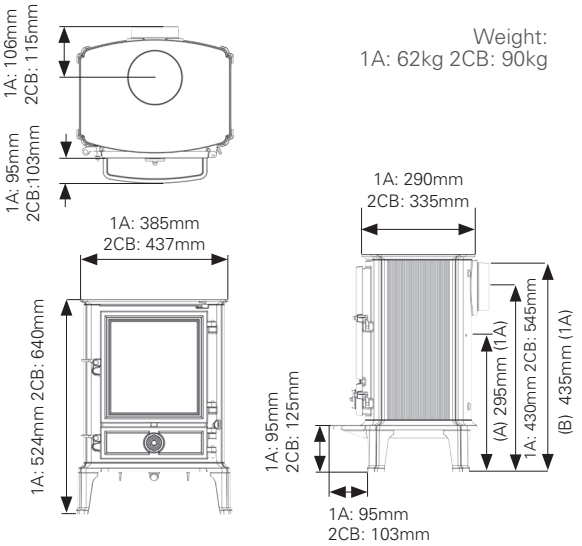

Huntingdon 28 ..... pages 26-27

Weight: 136kg

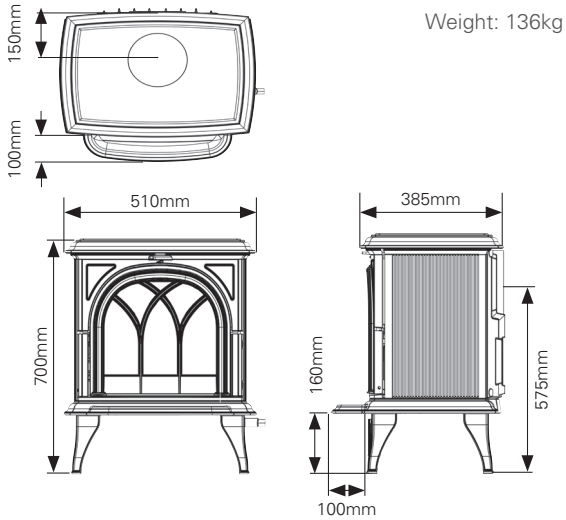

Brunel 3CB ..... pages 22-23

Weight: 120kg

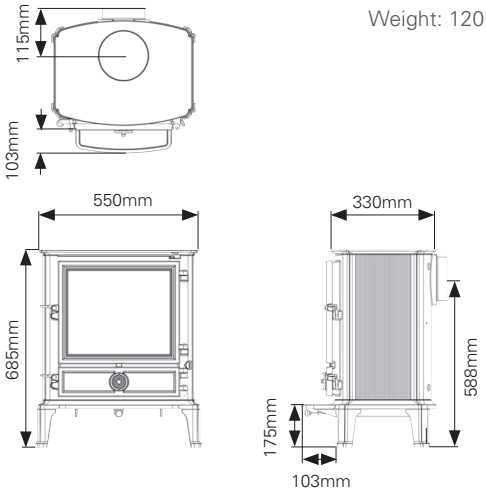

Huntingdon 30 ..... pages 28-29

Weight: 160kg

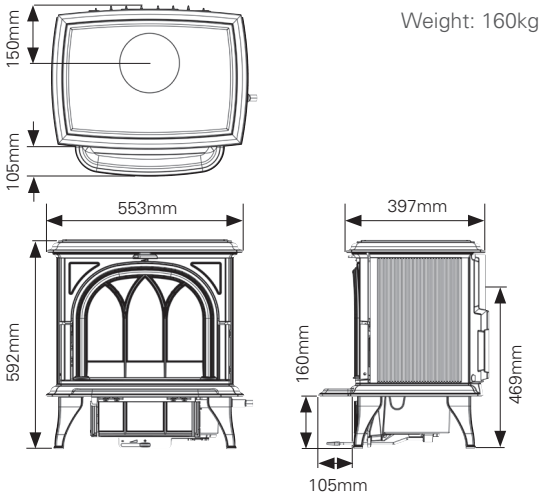

A HETAS approved installer should undertake a site survey prior to purchase and must install any Stovax stove. Your Stovax retailer will be able to advise on this. The above information is to assist you in your choice of a suitable Stovax stove. It is not intended to be all the information required to install your fire or stove; this can be obtained from your local Stovax retailer or you can view/download the relevant full installation instructions from the Stovax website at www.stovax.com

Huntingdon 35 ..... pages 30-31

Weight: 175kg

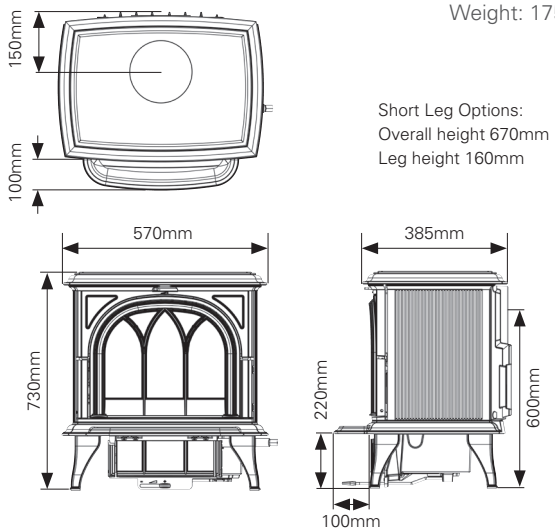

Short Leg Options:
Overall height 670mm
Leg height 160mm

Huntingdon 40 ..... pages 32-33

Weight: 180kg

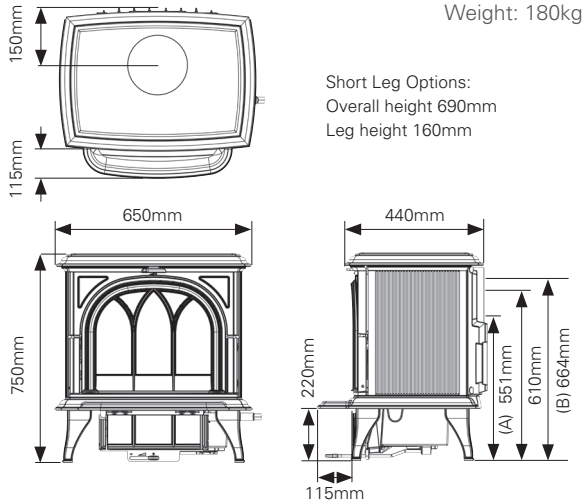

Short Leg Options:
Overall height 690mm
Leg height 160mm

Stockton 3 ..... pages 34-35

Weight: 76kg

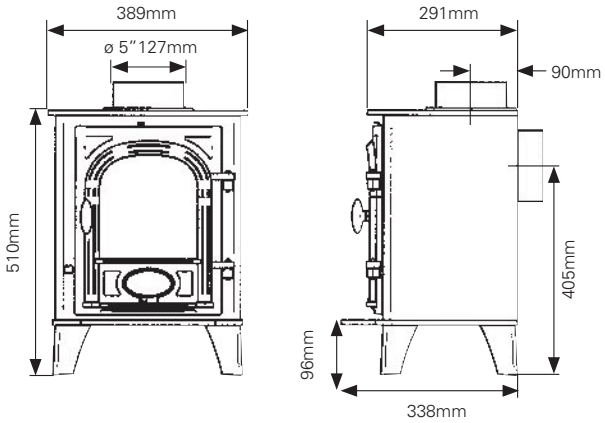

Stockton 4 ..... pages 36-37

Weight: 83kg

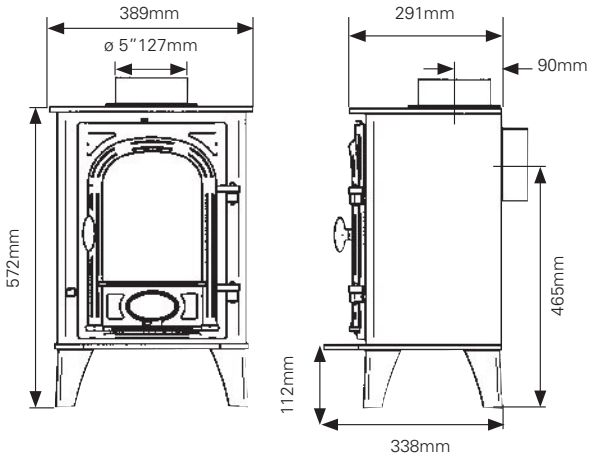

Stockton 5 ..... pages 38-39

Weight: 83-90kg

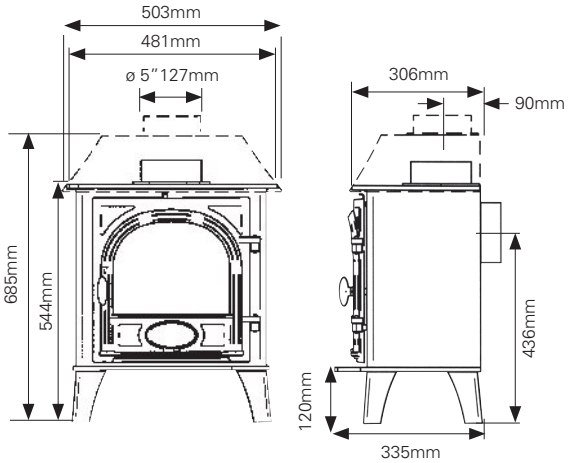

Stockton 5 Midline ..... pages 40-41

Weight: 100kg

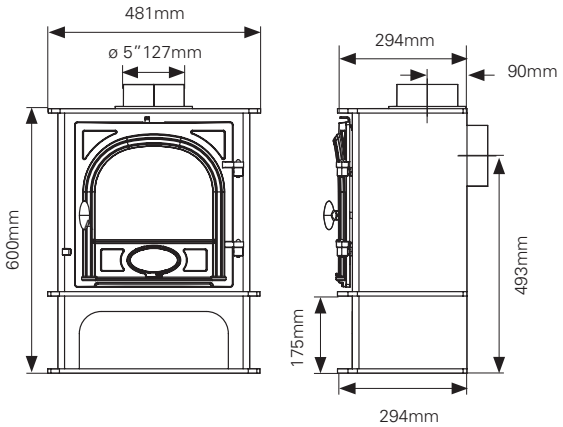

A HETAS approved installer should undertake a site survey prior to purchase and must install any Stovax stove. Your Stovax retailer will be able to advise on this. The above information is to assist you in your choice of a suitable Stovax stove. It is not intended to be all the information required to install your fire or stove; this can be obtained from your local Stovax retailer or you can view/download the relevant full installation instructions from the Stovax website at www.stovax.com

Dimensions - Traditional Stoves

Stockton 5 Wide ..... pages 42-43

Weight: 98kg

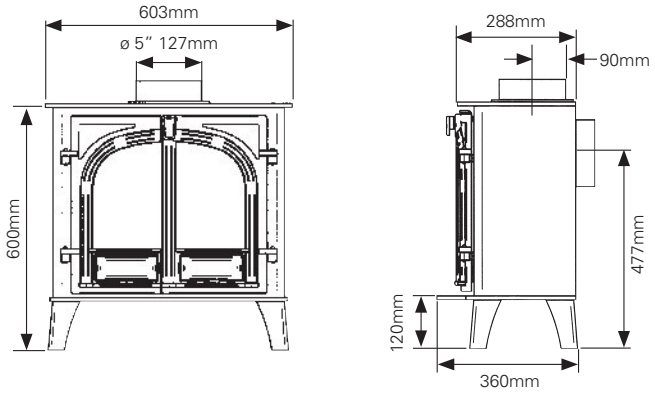

Stockton 6 ..... pages 46-47

Weight: 140kg

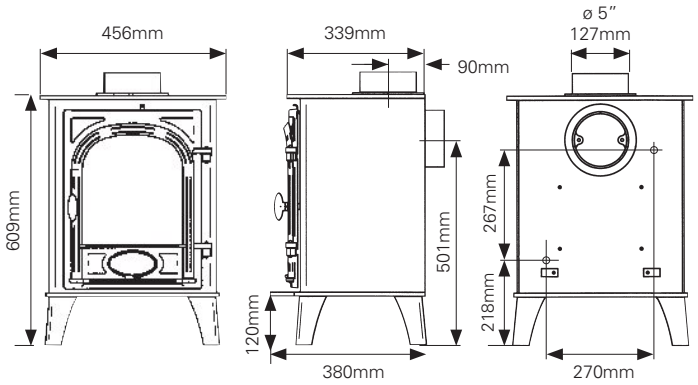

Clip-in Boiler Maximum heat output:
To boiler 2.9kW (10,000 BTU's). To room 3.1kW (10,400 BTU's). Total 6kW (20,400 BTU's)

Stockton 6 Highline..... pages 48-49

Weight: 130kg

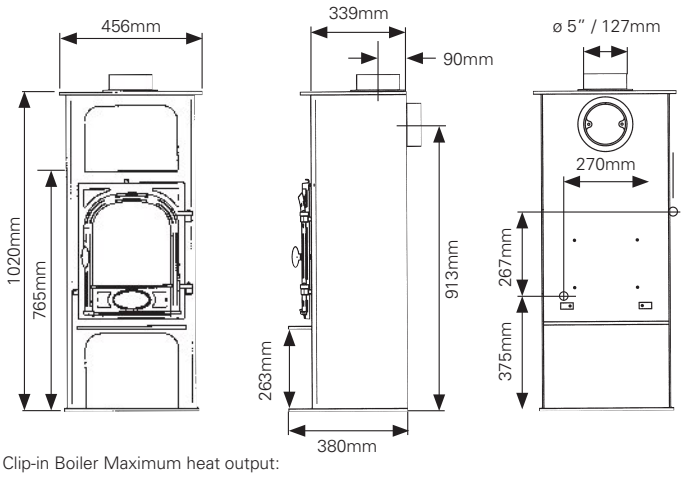

Clip-in Boiler Maximum heat output:
To boiler 2.9kW (10,000 BTU's). To room 3.1kW (10,400 BTU's). Total 6kW (20,400 BTU's)

Stockton 7 ..... pages 50-51

Weight: 130kg

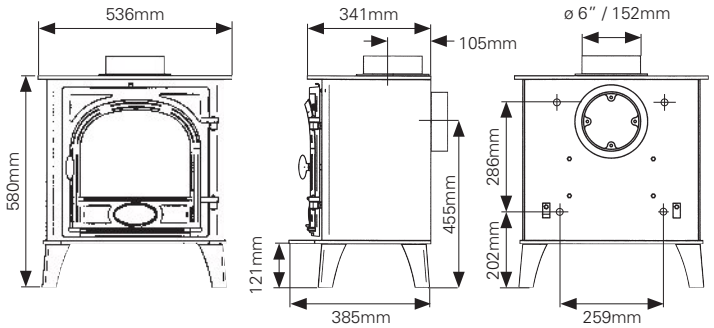

Clip-in Boiler Maximum heat output:
To boiler 3.5kW (12,000 BTU's). To room 3.5kW (11,800 BTU's). Total 7kW (23,800 BTU's)

Stockton 7 Inset ..... pages 52-53

Weight: 120kg

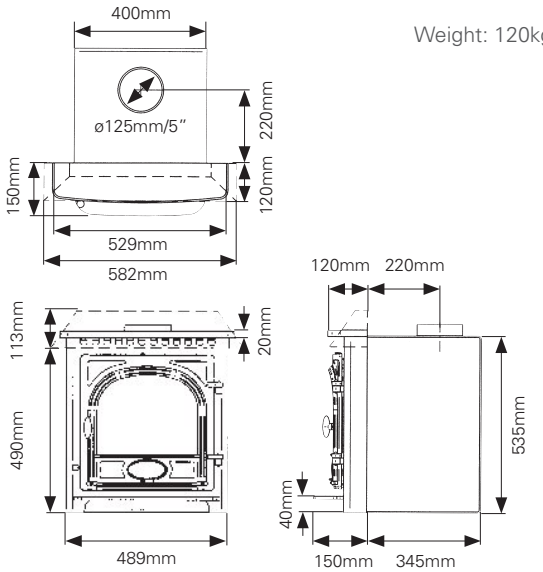

Stockton Milner ..... pages 44-45

Weight: 90kg

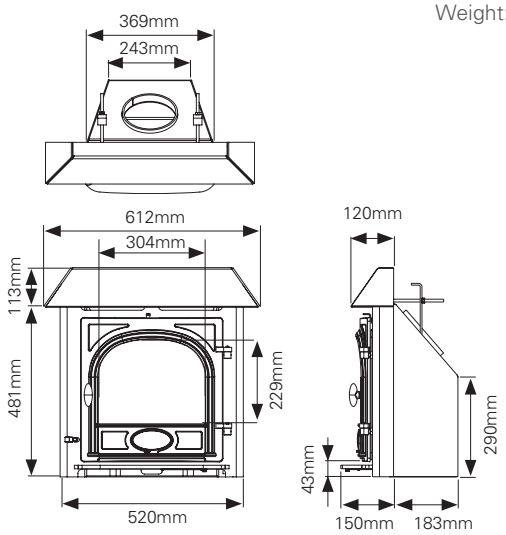

A HETAS approved installer should undertake a site survey prior to purchase and must install any Stovax stove. Your Stovax retailer will be able to advise on this. The above information is to assist you in your choice of a suitable Stovax stove. It is not intended to be all the information required to install your fire or stove; this can be obtained from your local Stovax retailer or you can view/download the relevant full installation instructions from the Stovax website at www.stovax.com

Stockton 8 ..... pages 54-55

Weight: 120kg

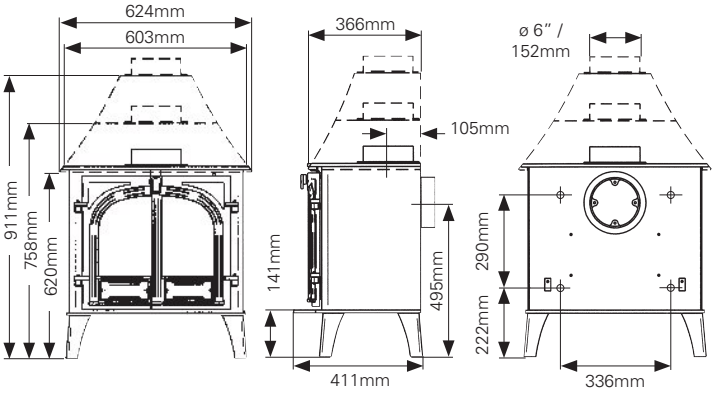

Maximum heat output for single and 2 door with 'clip-in' boiler:
To boiler 4.4kW (15,000 BTU's). To room 3.6kW (12,200 BTU's). Total 8kW (27,200 BTU's)

Stockton 8 Inset..... pages 56-57

Weight: 120kg

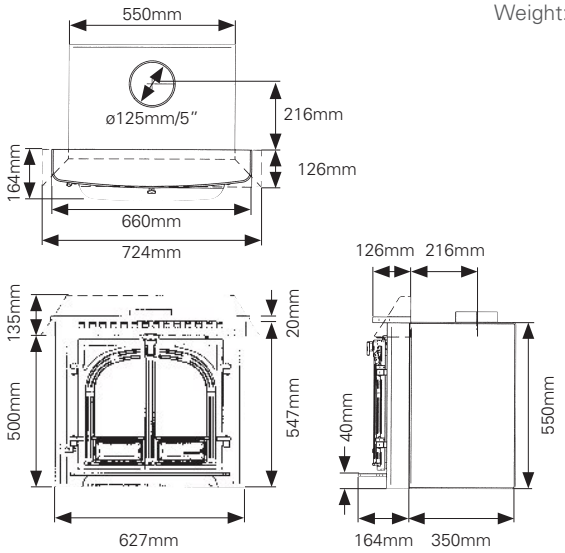

Stockton 11 ..... pages 58-59

Weight: 140kg

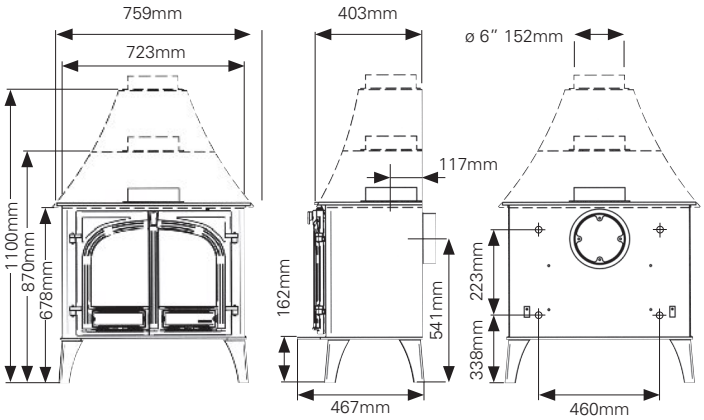

Clip-in Boiler
Maximum heat output for single and 2 door: To boiler 7.1kW (24,000 BTU's).
To room 3.1kW (10,500 BTU's). Total 10.2kW (34,500 BTU's)

Stockton 14 ..... pages 58-59

Weight: 171kg

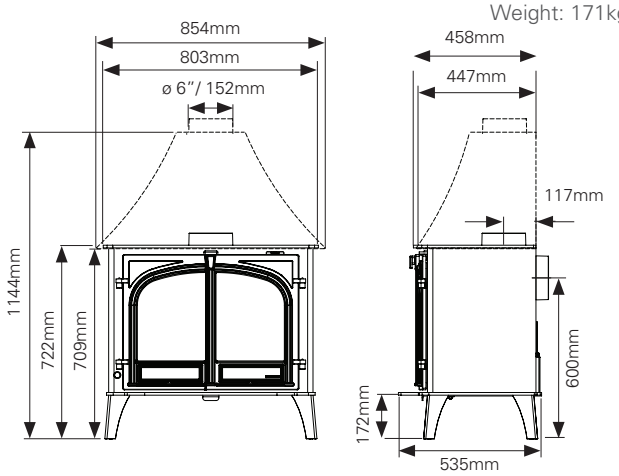

Stockton 8 Double Sided..... pages 60-61

Weight: 120kg

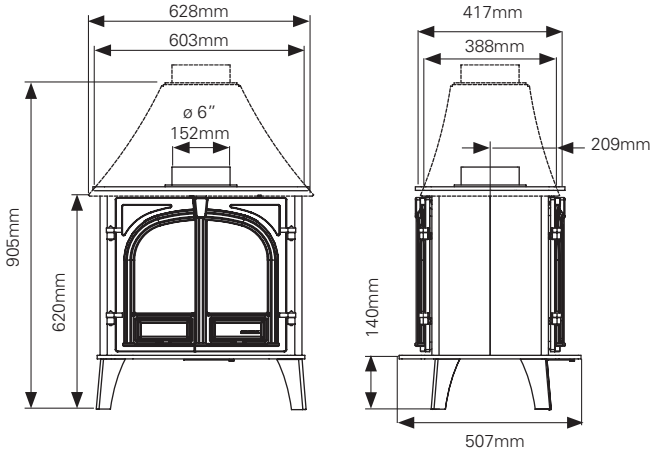

Stockton 11 Double Sided..... pages 60-61

Weight:
160 - 175kg

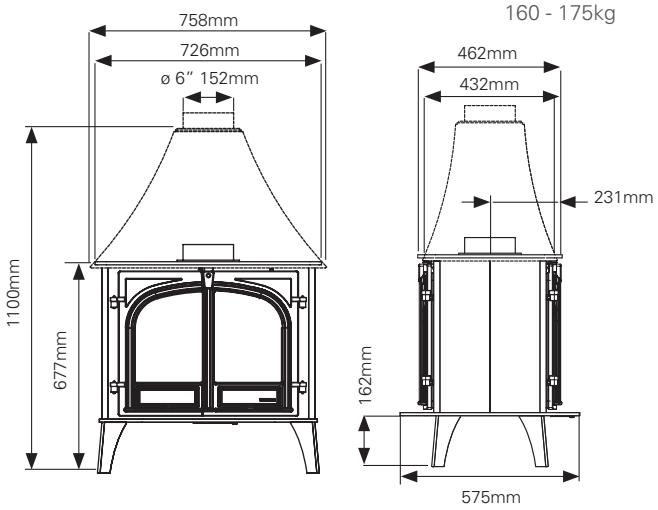

A HETAS approved installer should undertake a site survey prior to purchase and must install any Stovax stove. Your Stovax retailer will be able to advise on this. The above information is to assist you in your choice of a suitable Stovax stove. It is not intended to be all the information required to install your fire or stove; this can be obtained from your local Stovax retailer or you can view/download the relevant full installation instructions from the Stovax website at www.stovax.com

Dimensions - Traditional Stoves

Stockton 8 Cook Stove..... pages 64-65

Weight: 120kg

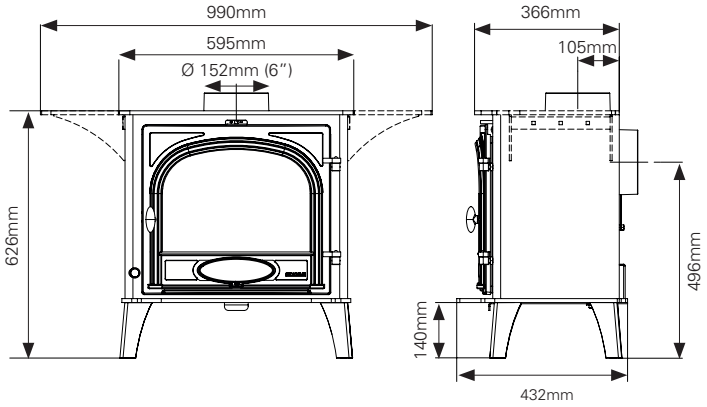

Stockton 11 Cook Stove..... pages 64-65

Weight: 160kg

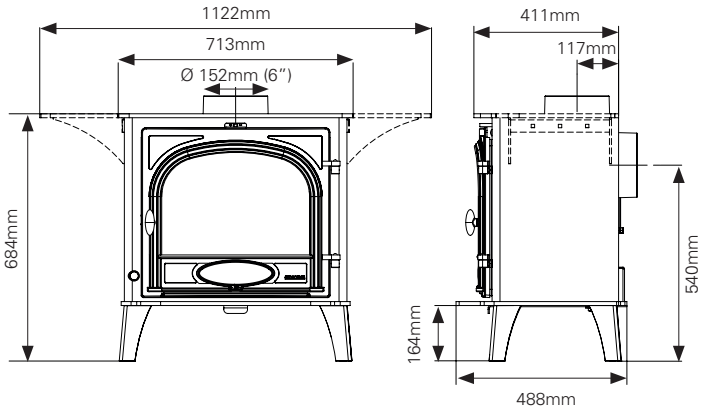

Riva Plus Small ..... pages 66-67

Weight: 95kg

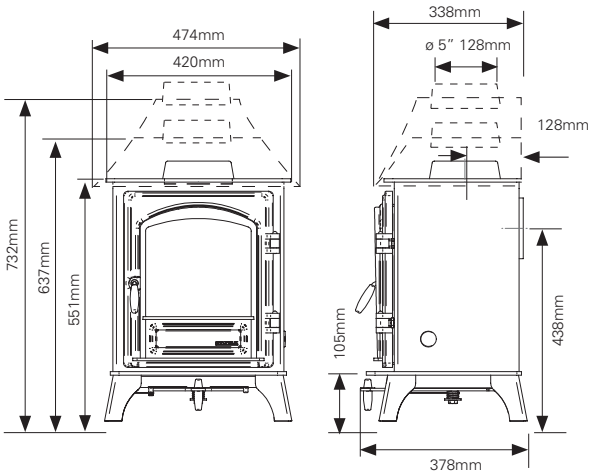

Riva Plus Midi ..... pages 66-67

Weight: 120kg

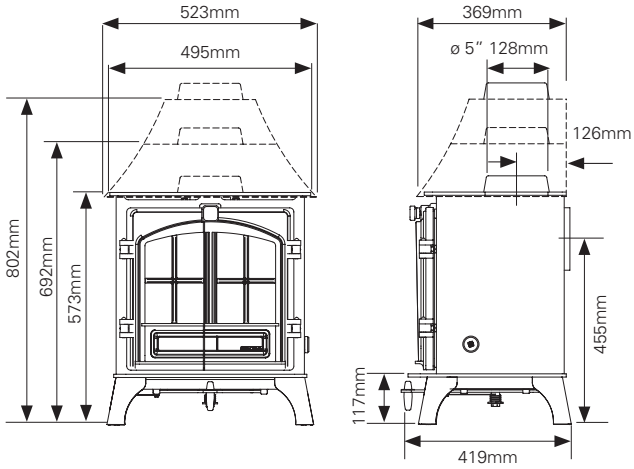

Riva Plus Medium ..... pages 68-69

Weight: 146kg

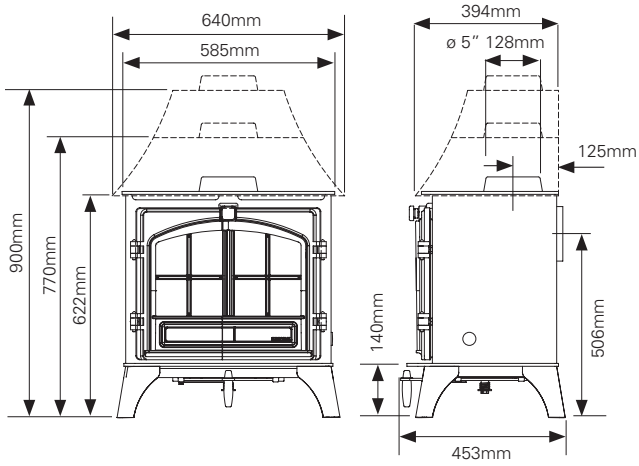

Riva Plus Large ..... pages 68-69

Weight: 175kg

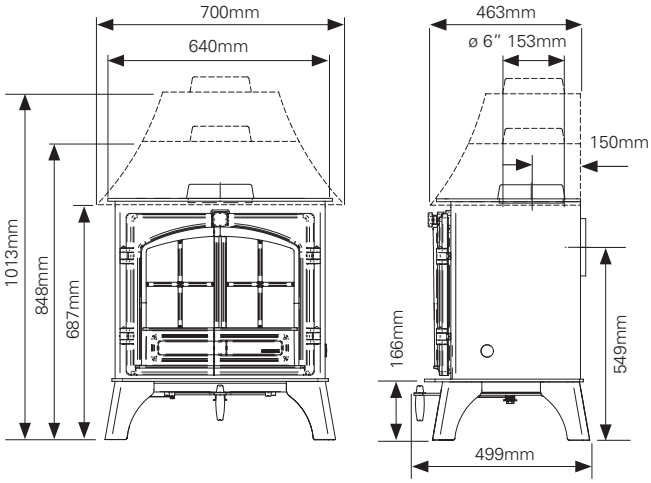

A HETAS approved installer should undertake a site survey prior to purchase and must install any Stovax stove. Your Stovax retailer will be able to advise on this. The above information is to assist you in your choice of a suitable Stovax stove. It is not intended to be all the information required to install your fire or stove; this can be obtained from your local Stovax retailer or you can view/download the relevant full installation instructions from the Stovax website at www.stovax.com

Dimensions - Contemporary Stoves

Vogue Small ..... pages 72-73

Weight: 71kg

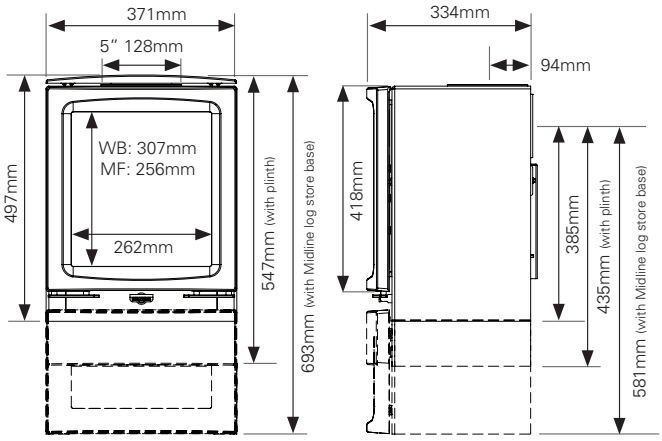

Vogue Small T ..... pages 74-75

Weight: 74kg

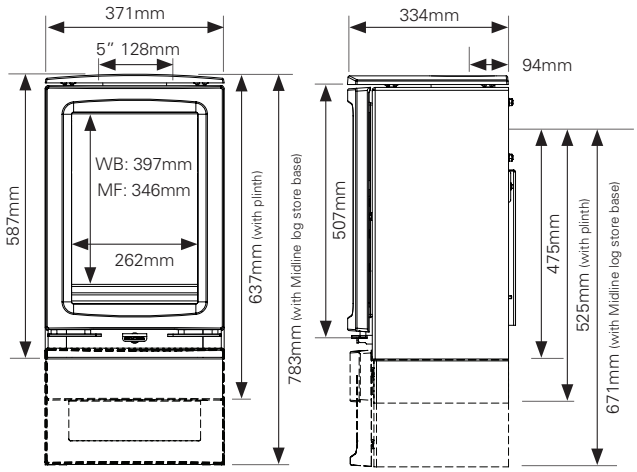

Vogue Midi ..... pages 76-77

Weight: 80kg

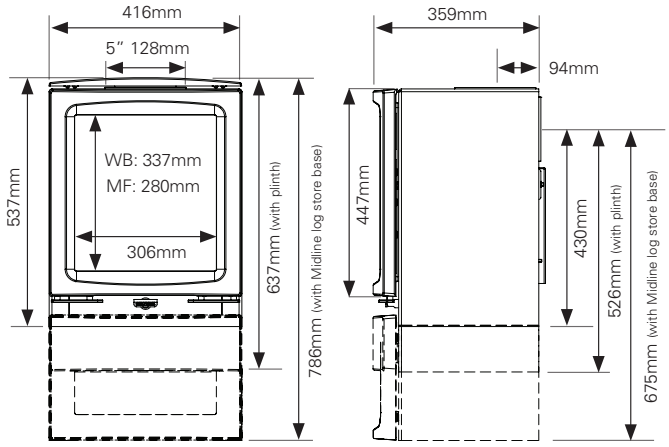

Vogue Midi T & Wall Hung ..... pages 78-81

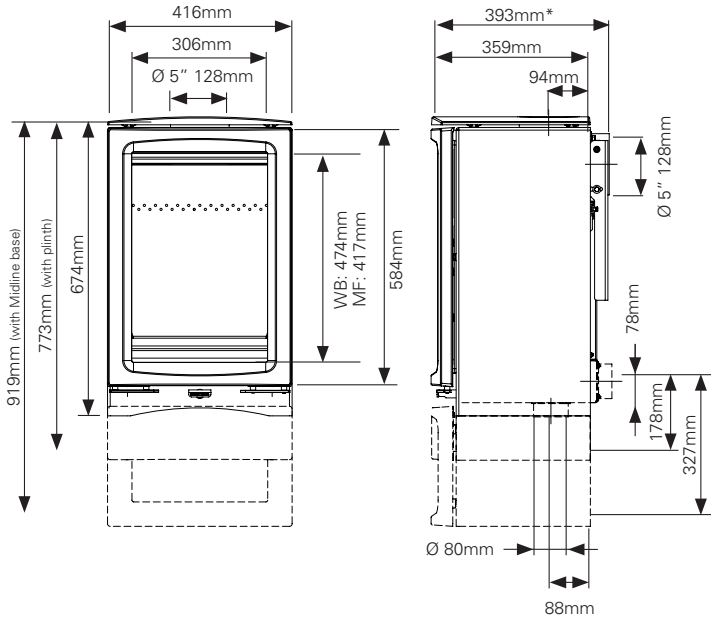

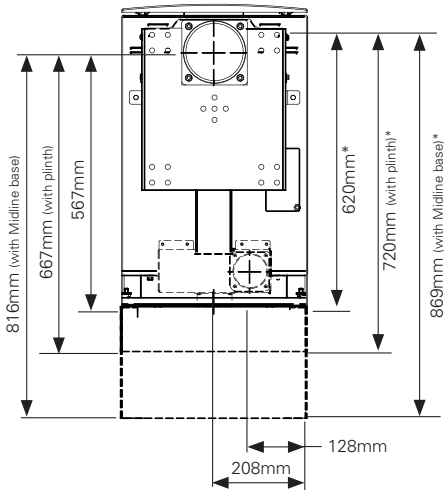

* When fitted with optional Wall Mounting Bracket

Weight: 91kg

Vogue Midi woodburning with optional Plinth base.

A HETAS approved installer should undertake a site survey prior to purchase and must install any Stovax stove. Your Stovax retailer will be able to advise on this. The above information is to assist you in your choice of a suitable Stovax stove. It is not intended to be all the information required to install your fire or stove; this can be obtained from your local Stovax retailer or you can view/download the relevant full installation instructions from the Stovax website at www.stovax.com

Dimensions - Contemporary Stoves

Vogue Medium ..... pages 82-83

Weight: 120kg

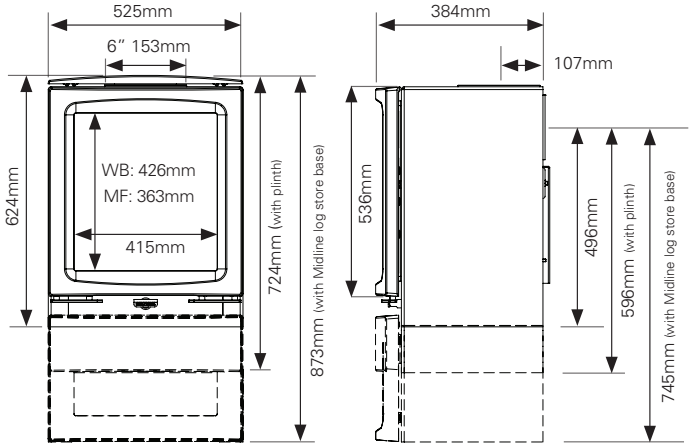

Vogue Medium Slimline ..... pages 84-85

Weight: 98kg

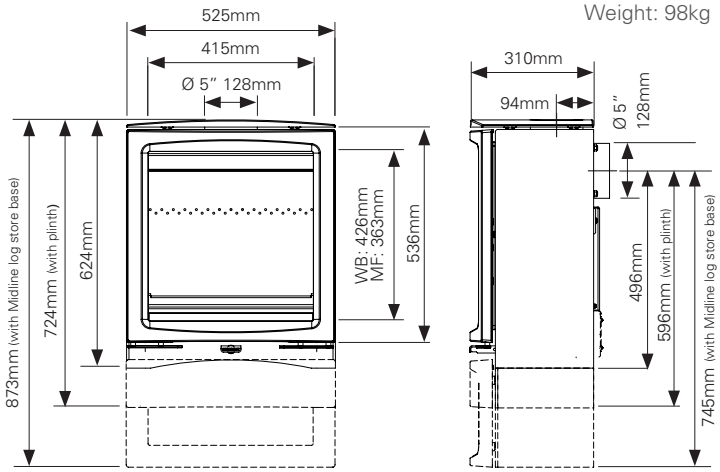

View 3 ..... pages 86-87

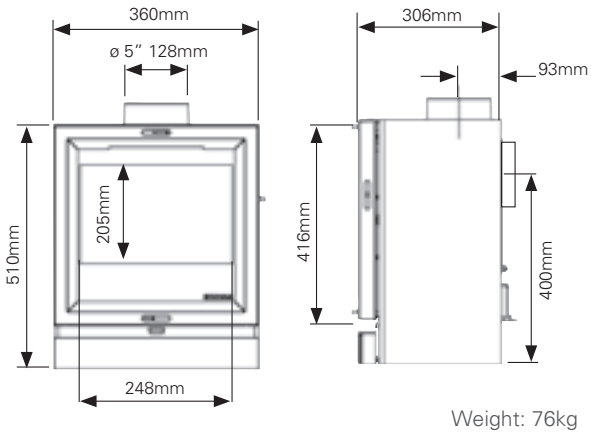

Weight: 76kg

View 5 ..... pages 88-89

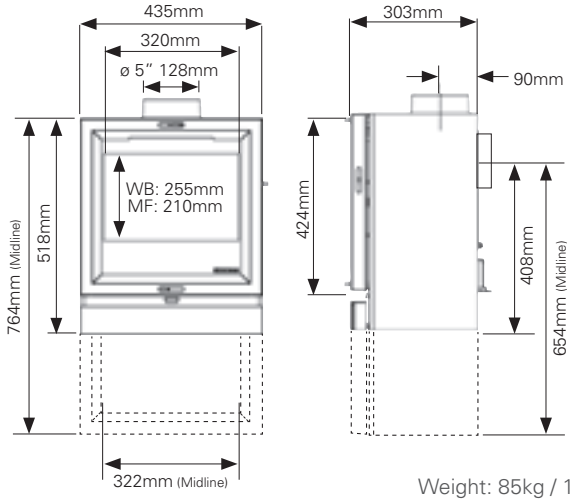

Weight: 85kg / 109kg

View 5 Wide ..... pages 90-91

Weight: 95kg / 108kg

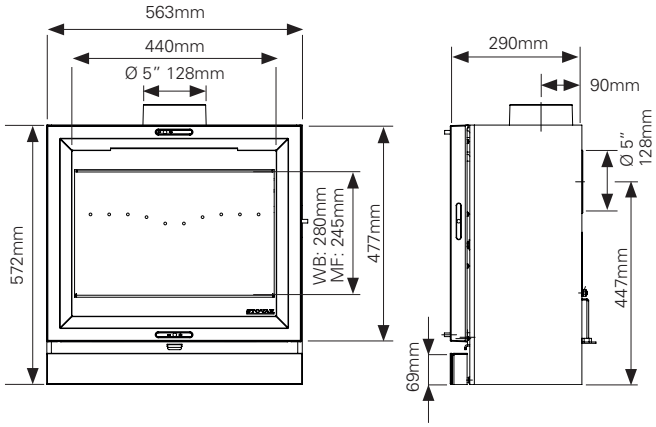

View 5T ..... pages 92-93

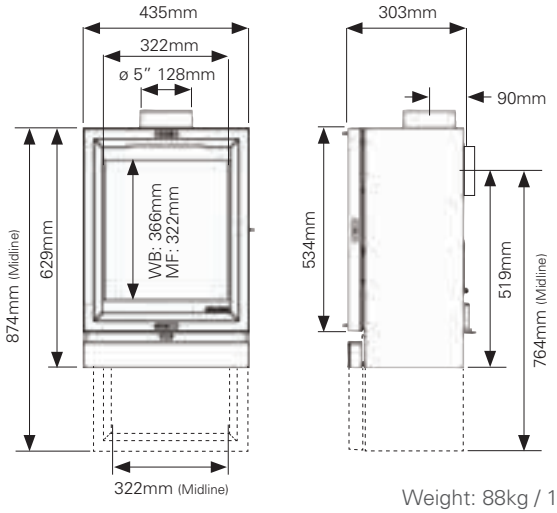

Weight: 88kg / 114kg

A HETAS approved installer should undertake a site survey prior to purchase and must install any Stovax stove. Your Stovax retailer will be able to advise on this. The above information is to assist you in your choice of a suitable Stovax stove. It is not intended to be all the information required to install your fire or stove; this can be obtained from your local Stovax retailer or you can view/download the relevant full installation instructions from the Stovax website at www.stovax.com

View 7 Inset ..... pages 94-95

Weight: 120kg

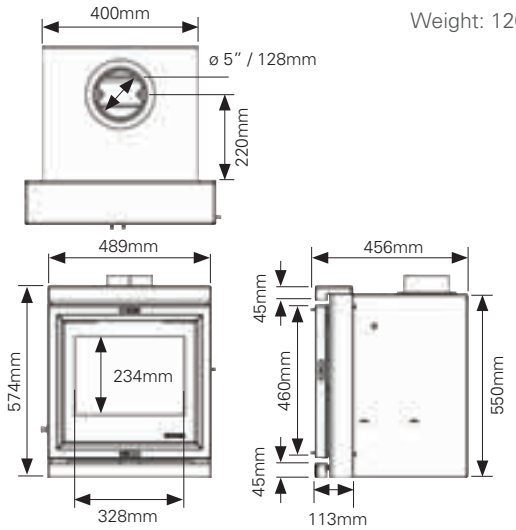

View 8 ..... pages 96-97

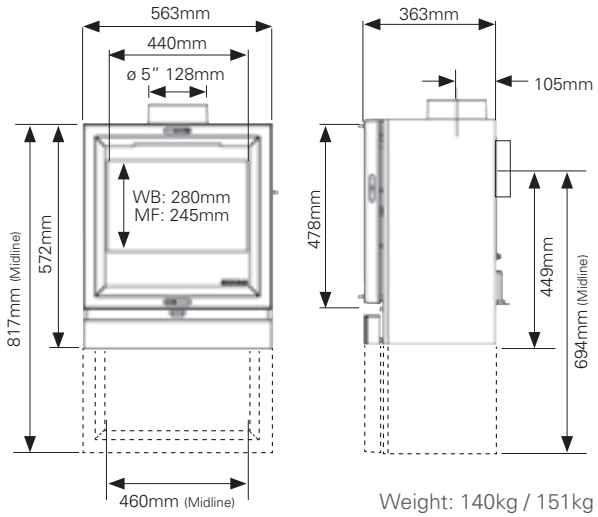

Weight: 140kg / 151kg

Vision Small ..... pages 98-99

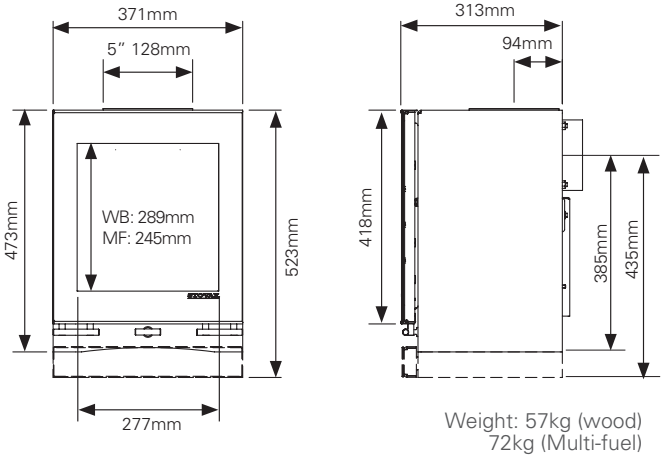

Weight: 57kg (wood)
72kg (Multi-fuel)

Vision Small T ..... pages 100-101

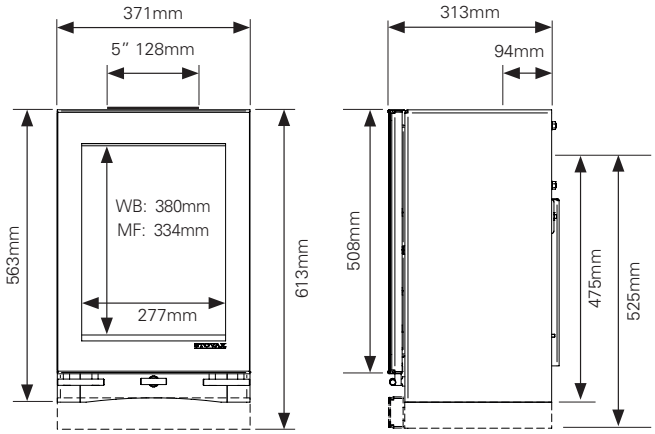

Weight: 61.5kg

Vision Midi ..... pages 102-103

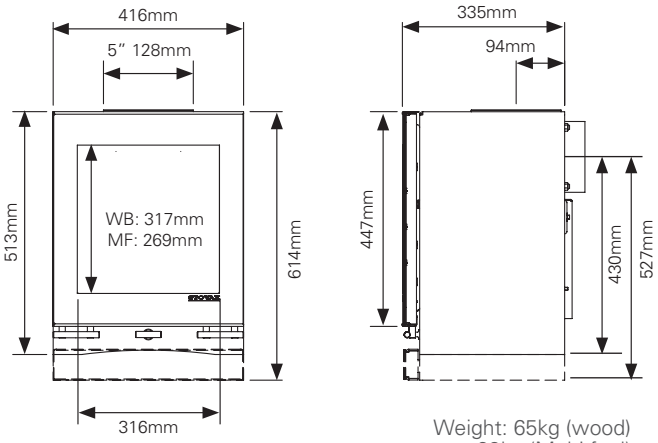

Weight: 65kg (wood)
92kg (Multi-fuel)

View 5T Multi-fuel burning logs

A HETAS approved installer should undertake a site survey prior to purchase and must install any Stovax stove. Your Stovax retailer will be able to advise on this. The above information is to assist you in your choice of a suitable Stovax stove. It is not intended to be all the information required to install your fire or stove; this can be obtained from your local Stovax retailer or you can view/download the relevant full installation instructions from the Stovax website at www.stovax.com

Dimensions - Contemporary Stoves

Vision Midi T & Wall Hung..... pages 104-107

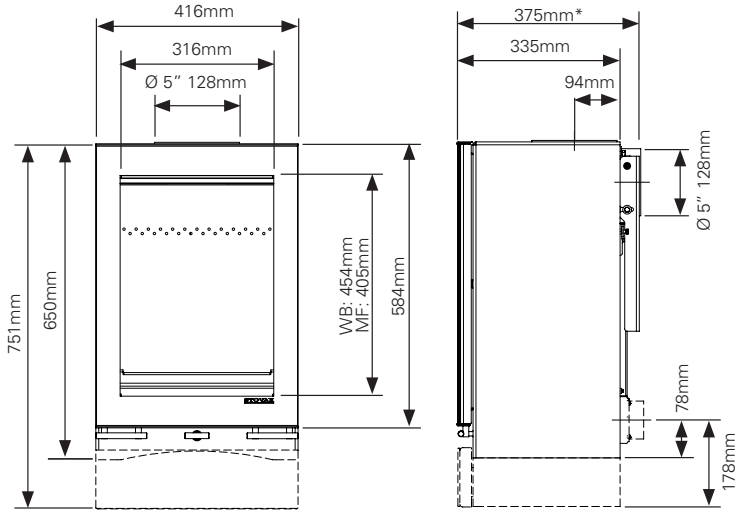

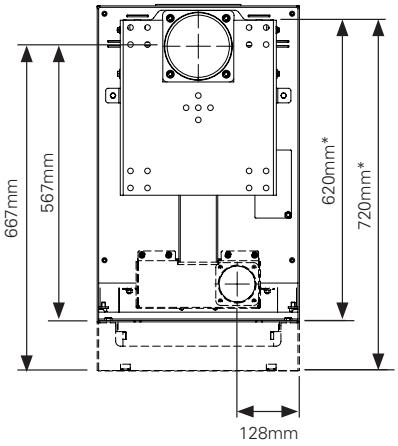

* When fitted with optional Wall Mounting Bracket

Weight: 76kg (wood)
80kg (multi-fuel)

Vision Medium ..... pages 108-109

Weight: 92.5kg (wood)
123kg (multi-fuel)

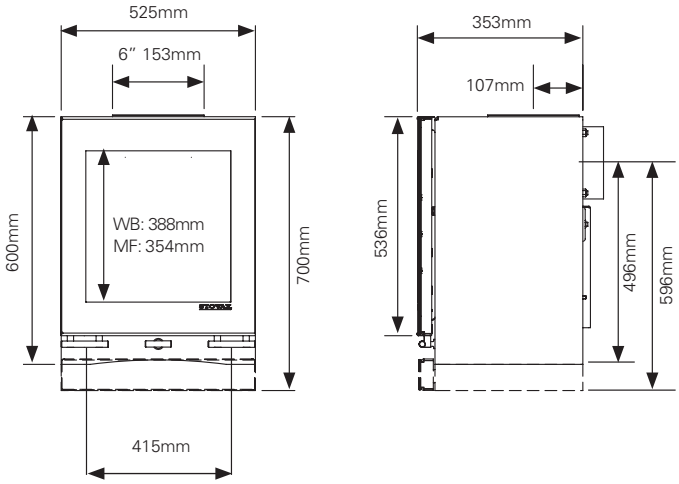

Vision Medium Slimline ..... pages 110-111

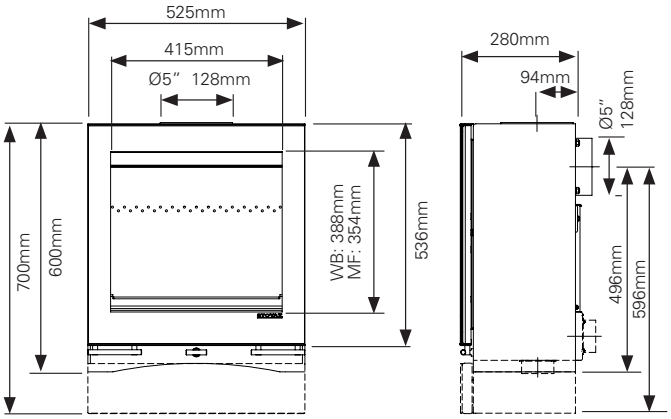

Weight: 81kg (wood)
86kg (multi-fuel)

Vision Medium multi-fuel burning logs

A HETAS approved installer should undertake a site survey prior to purchase and must install any Stovax stove. Your Stovax retailer will be able to advise on this. The above information is to assist you in your choice of a suitable Stovax stove. It is not intended to be all the information required to install your fire or stove; this can be obtained from your local Stovax retailer or you can view/download the relevant full installation instructions from the Stovax website at www.stovax.com

Dimensions - Boiler Stoves

Stockton 7HB Inset Boiler ..... pages 118-119

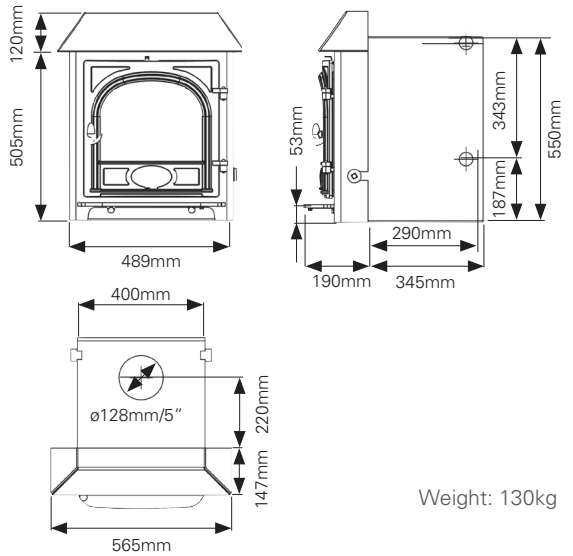

Weight: 130kg

Stockton 14HB Boiler ..... pages 118-119

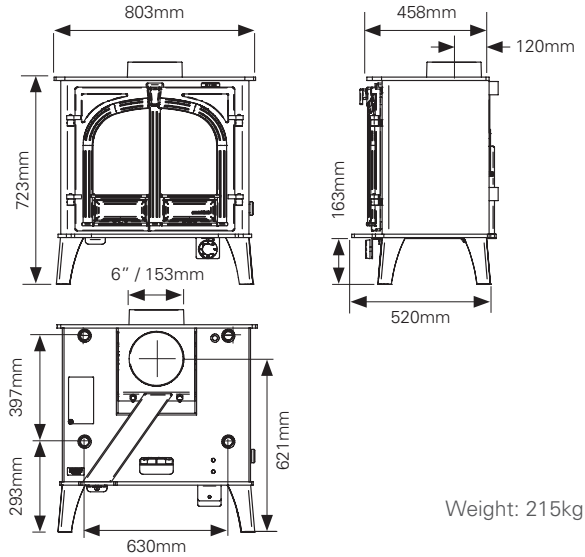

Weight: 215kg

Stockton 8HB Boiler ..... pages 118-119

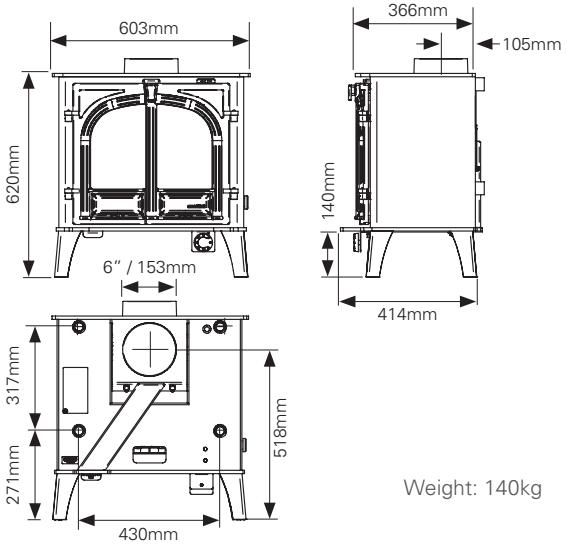

Weight: 140kg

View 7HB Inset Boiler..... pages 120-121

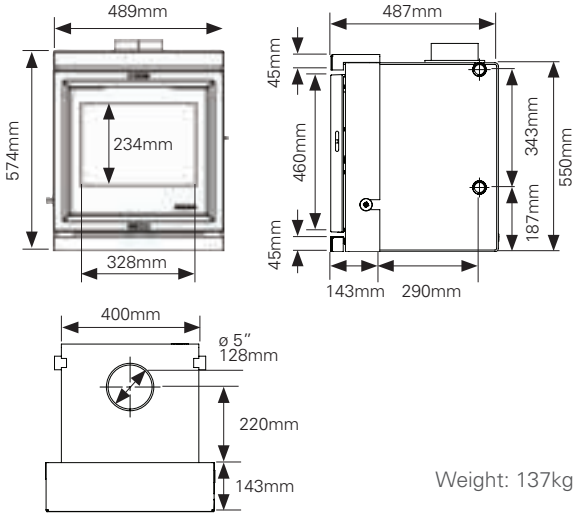

Weight: 137kg

Stockton 11HB Boiler ..... pages 118-119

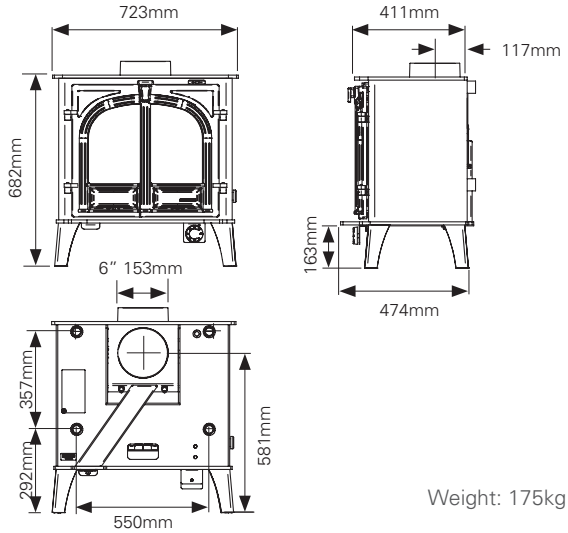

Weight: 175kg

View 8HB Boiler ..... pages 120-121

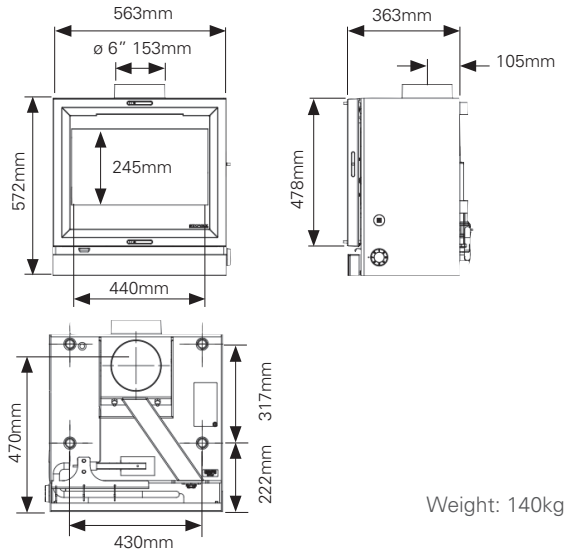

Weight: 140kg

A HETAS approved installer should undertake a site survey prior to purchase and must install any Stovax stove. Your Stovax retailer will be able to advise on this. The above information is to assist you in your choice of a suitable Stovax stove. It is not intended to be all the information required to install your fire or stove; this can be obtained from your local Stovax retailer or you can view/download the relevant full installation instructions from the Stovax website at www.stovax.com

Further Information

Stovax Heat Shields

Stovax offer a range of highly effective Heat Shields for the Stockton, Vogue, View and Vision stove ranges. These fantastic additions will allow a reduction in the distance to combustible materials at the rear and sides of the stoves as shown right. The Stovax Heat Shields not only maximise the available space within the room, but they also enable you to accomodate a wider range of materials in your interior design. For more information, please speak to your local Stovax retailer.

Stove	Product Code	Distance from sides	Distance from rear
Stockton 3	ST3HSK	350mm	150mm
Stockton 4	ST4HSK	350mm	150mm
Stockton 5	ST5HSK	250mm	150mm
Stockton 5 Midline	ST5HSK	250mm	150mm
Stockton 5 Wide	ST5WIDHSK	300mm	300mm
Stockton 6	ST6HSK	300mm	200mm
Stockton 7	ST7HSK	300mm	200mm
View 3	VW-3HSK	400mm	200mm
View 5	VW-5HSK	300mm	200mm
View 5 Wide	VW-5WIDHSK	300mm	200mm
View 5 Midline	VW-5HSK	300mm	200mm
View 5T	VW-5THSK	300mm	200mm
View 5T Midline	VW-5THSK	300mm	200mm
Vision Small	RVN-SMHSK-E	350mm	100mm
Vision Small T	RVN-SMTHSK-E	350mm	100mm
Vision Midi	RVN-MIDHSK-E	400mm	100mm
Vision Midi T	RVN-MIDTHSK-E	400mm	100mm
Vision Medium	RVN-MEDHSK-E	300mm	50mm
Vision Medium Slimline	RVN-MEDHSK-E	300mm	50mm
Vogue Small	VG-SMHSK-E	350mm	100mm
Vogue Small T	VG-SMTHSK-E	350mm	100mm
Vogue Midi	VG-MIDHSK-E	400mm	100mm
Vogue Midi T	VG-MIDTHSK-E	400mm	100mm
Vogue Medium	VG-MEDHSK-E	300mm	50mm
Vogue Medium Slimline	VG-MEDHSK-E	300mm	50mm

Stockton 5 Multi-fuel with heat shield

Vogue Midi Woodburning with optional Midline wood store base

Dedicated External Air Supply

Designed from conception to be airtight, Sheraton, Vogue and Vision stoves can be optionally installed with a dedicated external air supply, meaning they do not need to draw any air from the room. This potentially negates the need for an additional air vent, therefore minimising drafts.

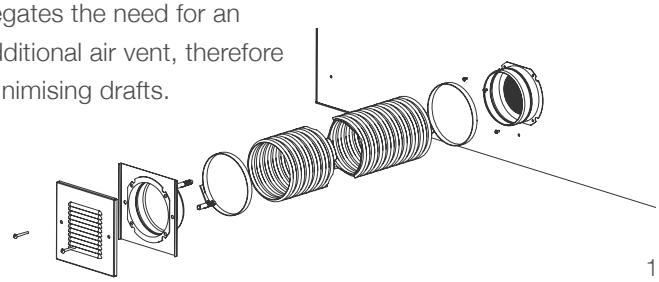

Sheraton, Vogue & Vision Stoves

Exceeding Ecodesign

Designed with the very latest firebox engineering, the Sheraton, Vogue and Vision ranges represents the next generation of stove design. Their ultra-clean, high efficiency combustion systems ensure that substances present in smoke emissions such as Carbon Monoxide (CO), nitrogen oxides (NOX), organic gaseous compounds (OGC) and particulates (PM) are minimised - making them some of the most eco-friendly stoves in the world†. All Vogue, Vison and Sheraton models easily pass Smoke Control Zone requirements and almost all have been independently verified by HETAS as SIA Ecodesign Ready, meeting the requirements of the 2022 Ecodesign directive.

SIA ecodesign ready

Total Efficiency - %

Balancing a stove's efficiency with cleanliness of burning is a precise science, requiring expert engineering and meticulous testing. Sheraton, Vogue & Vision stoves† focus on delivering the cleanest burn possible whilst still surpassing the 2022 Ecodesign Efficiency target of 72.3%, resulting in a range of truly environmentally friendly products.

	Small	Small T	Midi / Sheraton 5	Midi T	Medium	Medium Slimline	Ecodesign 2022 Min. Requirement
WB Model	81%	78%	78%	80%	76%	75.6%†	73%
MF Model*	80%	80%	79%	78%	81%	79%	73%

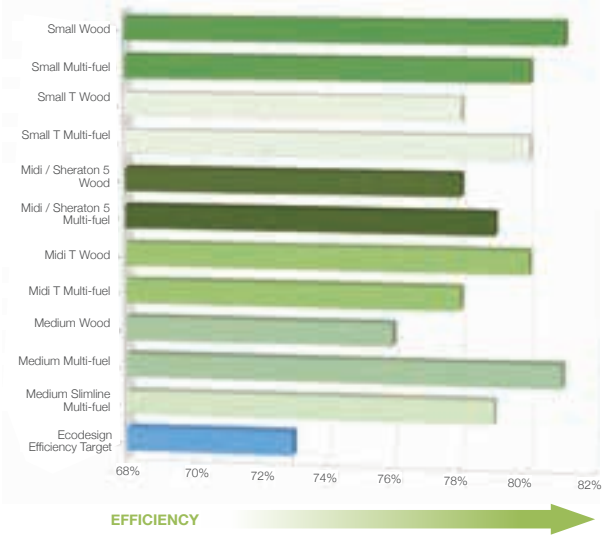

PM (Particulate Matter) mg/m³

Although PMs are currently measured for UK smokeless zone requirements, the Ecodesign emission levels are much tighter than those currently permitted for smokeless zones. Our Ecodesign stoves burn well below future PM targets, with some models generating only a third of the amount of PM permitted emissions.

	Small	Small T	Midi / Sheraton 5	Midi T	Medium	Medium Slimline	Ecodesign 2022 OGC's Limit
WB Model	28	27	24	13	13	19†	40
MF Model*	27	26	15	16	20	13	40

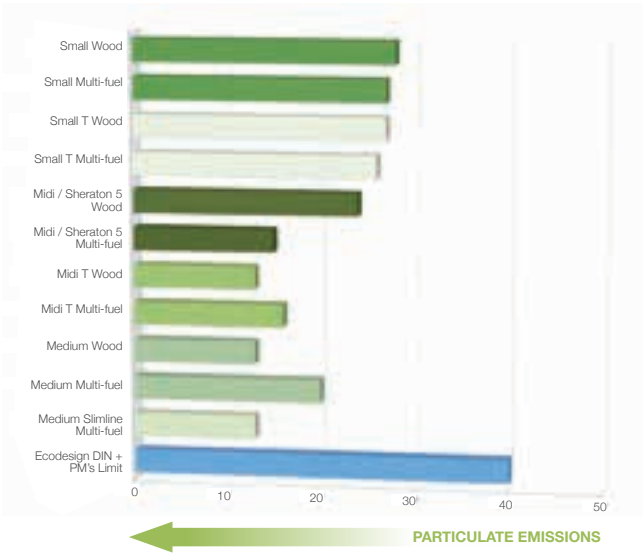

WB = Woodburning. MF = Multi-fuel

*Multi-fuel model figures quoted burning smokeless fuel

†Excludes Vision & Vogue Medium Slimline woodburning models

NOx (Nitrogen Oxides) mg/m³

Nitrogen oxides affect air quality and are another emission requirement of Ecodesign. All Stovax Ecodesign stoves demonstrate NOx emissions so low, well below the permitted amount.

	Small	Small T	Midi / Sheraton 5	Midi T	Medium	Medium Slimline	Ecodesign 2022 NOx Limit
WB Model	81	95	97	75	79	82†	200
MF Model*	119	127	113	124	100	168	200

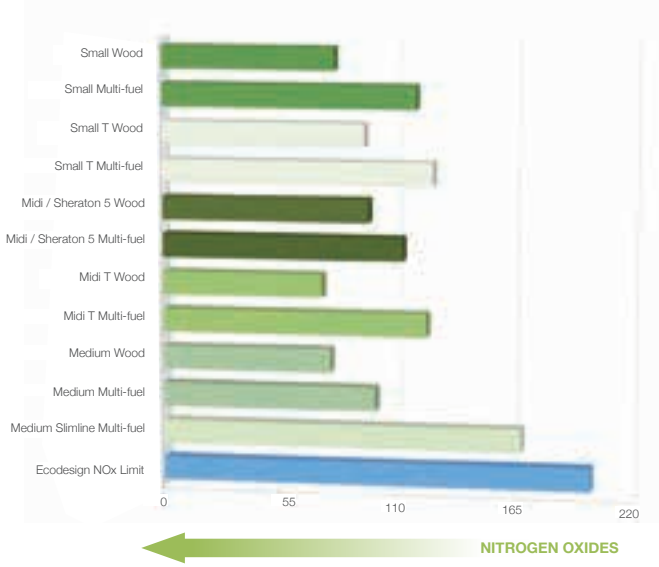

OGCs (Organic Gaseous Compounds) mg/m³

OGCs are also an important requirement of the forthcoming 2022 Ecodesign standard. All Stovax Ecodesign ranges fall comfortably below this exacting emission target.

	Small	Small T	Midi / Sheraton 5	Midi T	Medium	Medium Slimline	Ecodesign 2022 OGC's Limit
WB Model	88	82	57	98	80	115†	120
MF Model*	26	7	5	34	24	12	120

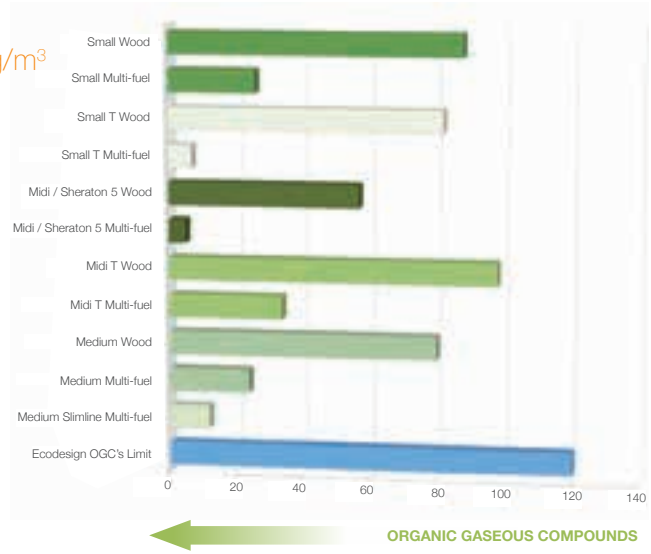

CO (Carbon Monoxide) % @ 13% O_2

Ecodesign limits are set to dramatically reduce the current UK Carbon Monoxide emission limits by a massive 88%, from 1% @ 13% O_2 to 0.12%. Vision, Vogue and Sheraton models† burn clean enough to meet this stringent forthcoming standard.

	Small	Small T	Midi / Sheraton 5	Midi T	Medium	Medium Slimline	Ecodesign 2022 CO Limit
WB Model	0.11	0.11	0.09	0.12	0.10	0.14†	0.12
MF Model*	0.07	0.03	0.04	0.11	0.08	0.08	0.12

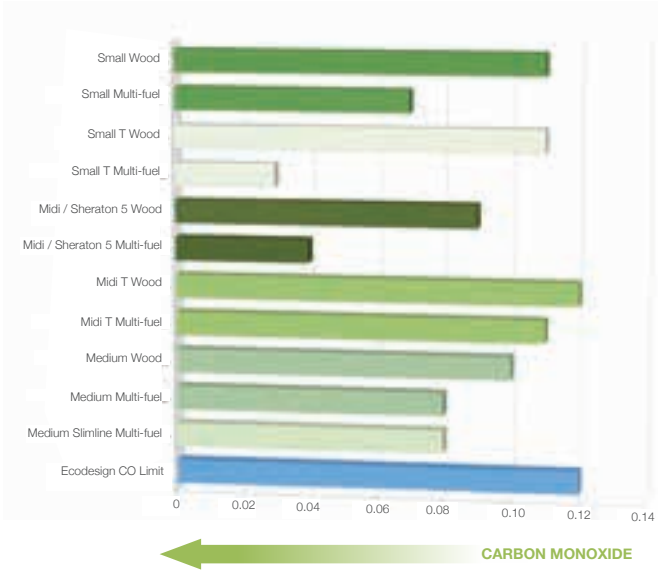

WB = Woodburning. MF = Multi-fuel

*Multi-fuel model figures quoted burning smokeless fuel

†Vision & Vogue Medium Slimline woodburning models are excluded

Enamelled Flue Pipe

Our range of high quality flue pipes offer further style options for the installation of your stove as well as optimum heating performance. The flue pipe diameters required for each model are shown on individual product pages.

	Matt Black	Gloss Black Enamel	Ivory Enamel
5” Diameter			
1’ straight with door	4504	-	4504IV
2’ straight with door	4505	-	4505IV
3’ straight with door	4506	-	4506IV
1’ straight without door	4500	4500GB	4500IV
2’ straight without door	4501	4501GB	4501IV
3’ straight without door	4502	4502GB	4502IV
3’ 7” straight without door	4545	-	-
1’ 3” - 2’ 1” (telescopic)	4542	-	-
3’ 4” - 4’ 6” (telescopic)	4540	-	-
Tee piece with end cap	4516	4516GB	4516IV
135° bend with door	4512	4512GB	-
110° bend with door	4513	-	-
90° bend with door	4514	-	-
150° bend with door	4522	-	-
135° bend without door	4537	4537GB	4537IV
150° bend without door	4538	-	-

6” Diameter			
1’ straight with door	4604	-	4604IV
2’ straight with door	4605	-	4605IV
3’ straight with door	4606	-	4606IV
1’ straight without door	4600	4600GB	4600IV
2’ straight without door	4601	4601GB	4601IV
3’ straight without door	4602	4602GB	4602IV
3’ 7” straight without door	4645	-	-
1’ 3” - 2’ 1” (telescopic)	4642	-	-
3’ 4” - 4’ 6” (telescopic)	4640	-	-
Tee piece with end cap	4616	4616GB	4616IV
135° bend with door	4612	4612GB	-
110° bend with door	4613	-	-
90° bend with door	4614	-	-
150° bend with door	4622	-	-
135° bend without door	4637	4637GB	4637IV
150° bend without door	4638	-	-

Please note: owing to different production processes, we cannot guarantee a perfect match between pipe and stove.

Vision Midi T Woodburning with Optional Glass Top Plate on 45 Low Stove Bench. Shown with Gloss Black Flue Pipe

Professional XQ™ Chimney Systems

FOR HOMES WITHOUT A CHIMNEY!

Stovax also offers a comprehensive range of stove & fireplace chimney systems, the Stovax Professional XQ™ collection. Crafted from 304L grade stainless steel for a durable outer finish, the fully sealed components offer water tight protection for the insulation within.

With innovative decorative options, the ability to specify a colour for your system and with a host of technical advancements such as their Twist-Lock system, the Professional XQ™ range provides an attractive, versatile and reliable solution for your flue system. Furthermore, the Professional XQ™ range carries a 10 year conditional warranty offering complete peace of mind.

10 YEAR EXTENDED WARRANTY

For further information or to request a brochure, contact your local retailer or visit www.stovax.com/chimneysystems

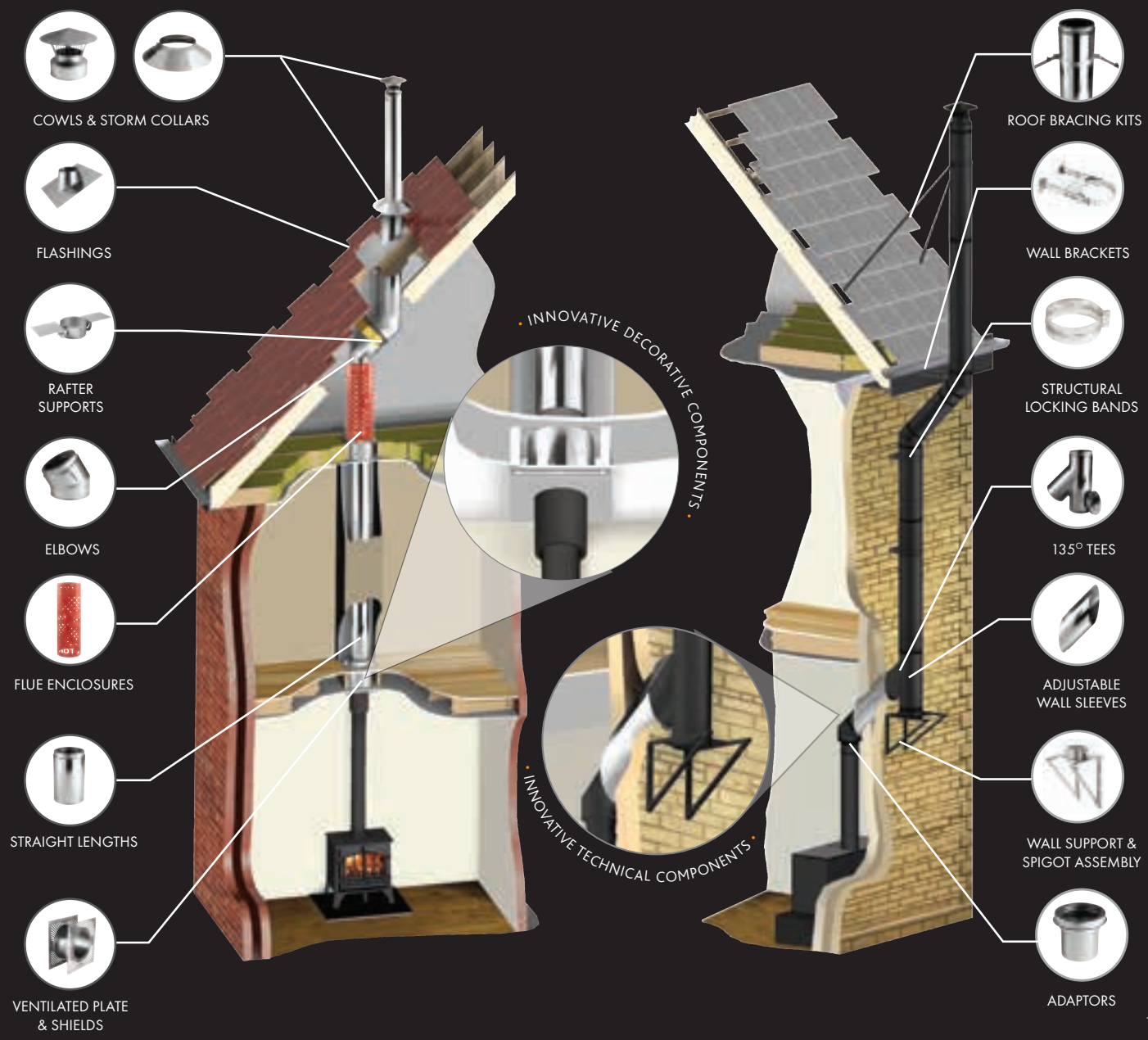

Accessories, Stove Care and Important Information

Stove Benches

These versatile steel benches are compatible with Stovax's freestanding contemporary stoves. With a variety of size options, they offer greater design possibilities to accommodate your individual styling requirements. You can even use the space beneath for log storage![Δ]

- Sturdy Steel construction
- Choice of sizes available
- Durable Matt Black finish
- Proportioned 60mm wide legs
- Allows for central or offset stove positioning

Product Code	Product	W (mm)	H (mm)	D (mm)
RVACLB45BHT	Bench 45 Low †	450	250	420
RVACB45BHT	Bench 45 High †	450	350	420
RVACLB100BHT	Bench 100 Low	1000	250	420
RVACB100BHT	Bench 100 High	1000	350	420
RVACLB120BHT	Bench 120 Low	1200	250	420
RVACB120BHT	Bench 120 High	1200	350	420
RVACLB140BHT	Bench 140 Low	1400	250	420
RVACB140BHT	Bench 140 High	1400	350	420
RVACLB180BHT	Bench 180 Low	1800	250	465
RVACB180BHT	Bench 180 High	1800	350	465
RVACLB120BHT-DP	Bench 120 Low, (Deep)	1200	250	500
RVACB120BHT-DP	Bench 120 High (Deep)	1200	350	500
RVACLB140BHT-DP	Bench 140 Low, (Deep)	1400	250	500
RVACB140BHT-DP	Bench 140 High, (Deep)	1400	350	500
RVACLB180BHT-DP	Bench 180 Low, (Deep)	1800	250	500
RVACB180BHT-DP	Bench 180 High, (Deep)	1800	350	500

† Suitable for View 3, 5 & 5T and Vision & Vogue Small, Small T, Midi & Midi T

Δ Logs are not to be stored directly beneath the stove position.

Vogue Midi Woodburner on 120 High Bench

45 High

100 High

120 High

140 High

45 Low

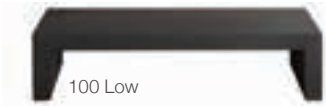

100 Low

120 Low

140 Low

180 High

180 Low

Care of your Stove

To help you get the best performance from your stove and keep it in good condition, inside and out, Stovax offers a wide range of cleaning and maintenance products. Stovax also supplies a wide variety of fireplace accessories. Your Stovax retailer will be able to give you full details or you may view the complete range at www.stovax.com.

Brochure Photography

All of the flame pictures shown in this brochure are taken from real fires. Please note however, that flame pictures will vary depending on the exact fuel used, flue conditions and surrounding geographical features. Given that building regulations are subject to change, some of the photography in this brochure may not comply with the requirements of the latest Building Regulations. You should always check your proposed installation arrangement with your HETAS trained installer before proceeding and observe the minimum distance to combustible materials as stated in the installation instructions. Some of the installations in this brochure are dependant on the use of heat shields to reduce the required separation from combustible material.

Stockton 6 multi-fuel in Matt Black

Product Improvement and Warranty

Stovax pursue a policy of constant product improvement. Products supplied may therefore differ in specification from those illustrated or described in this brochure, and you should always check the final specification with your Stovax retailer.

Your Stovax Expert Retailer will provide you with a Two Year Warranty for your new solid fuel stove. This can then be extended to a five year warranty, provided it has been registered with Stovax. During the registration process, the Expert Retailer details will be required for your Extended Warranty to be activated. Please note, this warranty excludes certain consumable parts and is dependant on your appliance being serviced by an appropriately qualified person 12 months after installation and annually thereafter. Stoves purchased outside of Stovax's Expert Retailer Network will carry a standard 12 month, non-extendable warranty. Full details of this warranty is set out to view on our website at www.stovax.com.

Important Safety & Technical Information

We recommend that a HETAS approved installer should undertake a site survey prior to purchase and it is a requirement that any Stovax Stove should be installed by an appropriately qualified HETAS approved installer.

All fires and stoves consume air as they burn. To comply with Building Regulations (Document J) you may need to install a fixed air vent to ensure adequate ventilation. Your Stovax retailer or HETAS installer will be able to advise on this. Furthermore, by law all installations also require a Carbon Monoxide monitor (such as product code 3045 available from Stovax).

You can also download detailed installation instructions prior to purchase from www.stovax.com.

Please note that all parts of these stoves, particularly the glass panel in the door, become extremely hot during operation and can result in serious injury and burns if touched. It is therefore recommended that a fireguard complying with BS 8423:2002 is used in the presence of young children, the elderly or infirm.

Have you considered gas and electric?

Many of the stoves in this brochure are also available in gas and electric versions. Offering all the ambience of a woodburning model, these innovative stoves provide superb flame visuals at the touch of a button.

Gazco Electric Huntingdon 20 with Clear Door.

Gazco Gas Vogue Midi T Highline

Our gas and electric division, Gazco, design and build stoves that look and feel every bit as solid and authentic as our woodburning stoves. This is because they are built with the same high quality materials and craftsmanship.

On the inside, cutting-edge technologies allow these advanced stoves to create captivating flame visuals, complemented by hand-painted fuel effects for breath-taking realism. And with various handset options, each model can be easily controlled from the comfort of the sofa.

For more details, ask your local retailer or visit www.gazco.com to view the complete range.

GAZCO

Fire Your Imagination

Sheraton 5 Woodburning, with Stovax Cavendish Bolection Limestone Mantel

Stovax gratefully acknowledges the assistance of the following companies with photographic settings:

www.amtico.com; www.beachbros.co.uk; www.birlea.com; www.bnsp.co.uk; www.chandnichowk.co.uk; www.chunkymonkeyfurniture.co.uk; www.debenhams.com; www.desenio.co.uk; www.houseoffraser.co.uk; www.easyart.com; www.eclectique.co.uk; www.faginsantiques.com; www.farmington.co.uk; www.furniturevillage.co.uk; www.graceandgloryhome.co.uk; www.justshutters.co.uk; www.lauraashley.com; www.next.co.uk; www.opiesuk.co.uk; www.theorangetree.co.uk; www.originalstyle.com; www.rudloe-stone.com; www.propfactory.co.uk; www.tobysreclaimation.co.uk; www.tritongalleries.co.uk; www.wallsandfloors.co.uk

STOVAX

Fire Your Imagination

Stovax Ltd Falcon Road, Sowton Industrial Estate, Exeter, Devon, England EX2 7LF

Trade sales: 01392 474000 Export sales: 00 44 1392 261990

Other depts: 01392 474011

Fax: 01392 219932 • Email: info@stovax.com

www.stovax.com

You can find your nearest retailer by visiting: **www.stovax.com/find-a-retailer**

Your Stovax retailer: £4.00

© All material copyright Stovax Ltd 2018 E & O E

Paper sourced from sustainable forests and printed using vegetable based inks

STOV1118